ProductionV2SiemensTIA

Table of contents

PLC_1 [CPU 1217C DC/DC/DC]	3 - 1
Program blocks	
MHJ-PLC-Lab-Function-S71200 [FC9000]	4 - 1
Main [OB1]	5 - 1
Item-Transfer-Package [FC1]	6 - 1
Component-Assembly [FC2]	7 - 1
Supply-Storage [FC3]	8 - 1
Pick and Place XYZ Alg(medium pallet) [FB1]	9 - 1
Pick and Place XYZ Alg_DB1 [DB10]	10 - 1
Pick and Place XYZ Alg(small pallet) [FB2]	11 - 1
Pick and Place XYZ Alg_DB2 [DB21]	12 - 1
Pallet-stack [FB3]	13 - 1
Palletizer [DB25]	14 - 1
Pallet_load [FB4]	15 - 1
Pallet_load_DB [DB23]	16 - 1
Med_SM_load [DB24]	17 - 1
System blocks	
Program resources	
Item_timer [DB1]	18 - 1
Count_Component [DB3]	19 - 1
Item_timer1 [DB2]	20 - 1
pnp delay [DB4]	21 - 1
pnp delay1 [DB5]	22 - 1
pnp delay2 [DB6]	23 - 1
pnp delay3 [DB7]	24 - 1
pnp delay4 [DB8]	25 - 1
pnp delay5 [DB9]	26 - 1
Arm delay [DB11]	27 - 1
Assem delay [DB12]	28 - 1
Assem delay1 [DB13]	29 - 1
Assem delay2 [DB14]	30 - 1
Assem delay3 [DB15]	31 - 1
Assem delay4 [DB16]	32 - 1
Assem delay5 [DB17]	33 - 1
Assem delay6 [DB18]	34 - 1
Assem delay7 [DB19]	35 - 1
Conveyor Scale Delay [DB20]	36 - 1
Roller reset delay [DB22]	37 - 1
BaseLid Delay1 [DB26]	38 - 1
BaseLid Delay2 [DB27]	39 - 1
Technology objects	40 - 1
PLC tags	
Global-Variable [41]	
PLC tags	41 - 1
User constants	42 - 1
Component Assembly [10]	
PLC tags	43 - 1
User constants	44 - 1
Item-Transfer-Package [9]	
PLC tags	45 - 1
User constants	46 - 1
Pallet_load [8]	
PLC tags	47 - 1
User constants	48 - 1
Palletizer [12]	
PLC tags	49 - 1
User constants	50 - 1
Pick and place 2-axis [6]	
PLC tags	51 - 1
User constants	52 - 1
Supply Storage [52]	
PLC tags	53 - 1
User constants	54 - 1
PLC data types	
System data types	55 - 1
Watch and force tables	
Forcetabelle	56 - 1

Traces	57 - 1
Measurements	
Analog pnp	58 - 1
Sensor Hiccups	59 - 1
Analog pnp_1	60 - 1
Combined measurements	61 - 1
OPC UA communication	
Server interfaces	62 - 1
PLC alarm text lists	63 - 1
Local modules	
PLC_1 [CPU 1217C DC/DC/DC]	64 - 1
DI 8x24VDC_1	65 - 1
DQ 16x24VDC_2	66 - 1
DQ 16x24VDC_1	67 - 1
AI 8x13BIT_1	68 - 1
AI 8x13BIT_2	69 - 1
AQ 4x14BIT_1	70 - 1
AQ 4x14BIT_2	71 - 1
AQ 4x14BIT_3	72 - 1

PLC_1 [CPU 1217C DC/DC/DC]

PLC_1					
General\Project information					
Name	PLC_1	**Author**	i72014	**Comment**	
Slot	1	**Rack**	0		
General\Catalog information					
Short designation	CPU 1217C DC/DC/DC	**Description**	Work memory 250 KB; 24VDC power supply with DI10 x 24VDC SINK/SOURCE, DI4 x RS422/485 Differential, DQ6 x 24VDC, DQ4 x RS422/485 Differential, AI2 and AQ2 on-board; 6 high-speed counters and 4 pulse outputs on-board; signal board expands on-board I/O; up to 3 communication modules for serial communication; up to 8 signal modules for I/O expansion; PROFINET IO controller, 2 ports, I-device, transport protocol TCP/IP, secure Open User Communication, S7 communication, Web server, OPC UA: Server DA	**Article number**	6ES7 217-1AG40-0XB0
Firmware version	V4.7				
General\Identification & Maintenance					
Plant designation		**Location identifier**		**Installation date**	2016-04-07 09:52:18.455
Additional information					
PROFINET interface [X1]\General					
Name	PROFINET-Schnittstelle_1	**Author**	i72014	**Comment**	
PROFINET interface [X1]\General\Project information					
Name	DI 14/DQ 10_1	**Comment**		**Name**	AI 2/AQ 2_1
Comment					
PROFINET interface [X1]\Ethernet addresses\Interface networked with					
Subnet:	PN/IE_1				
PROFINET interface [X1]\Ethernet addresses\Internet protocol version 4 (IPv4)					
IP configuration	Set IP address in the project	**IP address:**	192.168.0.1	**Subnet mask:**	255.255.255.0
Use router	False				
PROFINET interface [X1]\Ethernet addresses\PROFINET					
PROFINET device name is set directly at the device	False	**Generate PROFINET device name automatically**	True	**PROFINET device name:**	plc_1
Converted name:	plcxb1d0ed	**Device number:**	0		
PROFINET interface [X1]\Time-of-day synchronization					
Enable time synchronization via NTP server	Enable time synchronization via NTP server		IP addresses	**Server 1**	0.0.0.0
Server 2	0.0.0.0	**Server 3**	0.0.0.0	**Server 4**	0.0.0.0
Update interval	10sec			**CPU synchronizes the modules of the device.**	No synchronization
PROFINET interface [X1]\Digital inputs\Channel0					
Channel address	I0.0	**Input filters**	6.4 millisec	**Enable pulse catch**	0
PROFINET interface [X1]\Digital inputs\Channel0					
Enable rising edge detection	0	**Prefix Event Rising Edge**	49152	**Event name:**	0
Hardware interrupt:	0	**Rising edge0**	Rising edge0		
PROFINET interface [X1]\Digital inputs\Channel0					
Enable falling edge detection	0	**Prefix Event Falling Edge**	49280	**Event name:**	0
Hardware interrupt:	0	**Falling edge0**	Falling edge0		
PROFINET interface [X1]\Digital inputs\Channel1					
Channel address	I0.1	**Input filters**	6.4 millisec	**Enable pulse catch**	0
PROFINET interface [X1]\Digital inputs\Channel1					
Enable rising edge detection	0	**Prefix Event Rising Edge**	49153	**Event name:**	0
Hardware interrupt:	0	**Rising edge1**	Rising edge1		
PROFINET interface [X1]\Digital inputs\Channel1					
Enable falling edge detection	0	**Prefix Event Falling Edge**	49281	**Event name:**	0
Hardware interrupt:	0	**Falling edge1**	Falling edge1		
PROFINET interface [X1]\Digital inputs\Channel2					
Channel address	I0.2	**Input filters**	6.4 millisec	**Enable pulse catch**	0
PROFINET interface [X1]\Digital inputs\Channel2					
Enable rising edge detection	0	**Prefix Event Rising Edge**	49154	**Event name:**	0
Hardware interrupt:	0	**Rising edge2**	Rising edge2		
PROFINET interface [X1]\Digital inputs\Channel2					
Enable falling edge detection	0	**Prefix Event Falling Edge**	49282	**Event name:**	0
Hardware interrupt:	0	**Falling edge2**	Falling edge2		
PROFINET interface [X1]\Digital inputs\Channel3					
Channel address	I0.3	**Input filters**	6.4 millisec	**Enable pulse catch**	0
PROFINET interface [X1]\Digital inputs\Channel3					
Enable rising edge detection	0	**Prefix Event Rising Edge**	49155	**Event name:**	0
Hardware interrupt:	0	**Rising edge3**	Rising edge3		

PROFINET interface [X1]\Digital inputs\Channel3					
Enable falling edge detection	0	**Prefix Event Falling Edge**	49283	**Event name:**	0
Hardware interrupt:	0	**Falling edge3**	Falling edge3		
PROFINET interface [X1]\Digital inputs\Channel4					
Channel address	I0.4	**Input filters**	6.4 millisec	**Enable pulse catch**	0
PROFINET interface [X1]\Digital inputs\Channel4					
Enable rising edge detection	0	**Prefix Event Rising Edge**	49156	**Event name:**	0
Hardware interrupt:	0	**Rising edge4**	Rising edge4		
PROFINET interface [X1]\Digital inputs\Channel4					
Enable falling edge detection	0	**Prefix Event Falling Edge**	49284	**Event name:**	0
Hardware interrupt:	0	**Falling edge4**	Falling edge4		
PROFINET interface [X1]\Digital inputs\Channel5					
Channel address	I0.5	**Input filters**	6.4 millisec	**Enable pulse catch**	0
PROFINET interface [X1]\Digital inputs\Channel5					
Enable rising edge detection	0	**Prefix Event Rising Edge**	49157	**Event name:**	0
Hardware interrupt:	0	**Rising edge5**	Rising edge5		
PROFINET interface [X1]\Digital inputs\Channel5					
Enable falling edge detection	0	**Prefix Event Falling Edge**	49285	**Event name:**	0
Hardware interrupt:	0	**Falling edge5**	Falling edge5		
PROFINET interface [X1]\Digital inputs\Channel6					
Channel address	I0.6	**Input filters**	6.4 millisec	**Enable pulse catch**	0
PROFINET interface [X1]\Digital inputs\Channel6					
Enable rising edge detection	0	**Prefix Event Rising Edge**	49158	**Event name:**	0
Hardware interrupt:	0	**Rising edge6**	Rising edge6		
PROFINET interface [X1]\Digital inputs\Channel6					
Enable falling edge detection	0	**Prefix Event Falling Edge**	49286	**Event name:**	0
Hardware interrupt:	0	**Falling edge6**	Falling edge6		
PROFINET interface [X1]\Digital inputs\Channel7					
Channel address	I0.7	**Input filters**	6.4 millisec	**Enable pulse catch**	0
PROFINET interface [X1]\Digital inputs\Channel7					
Enable rising edge detection	0	**Prefix Event Rising Edge**	49159	**Event name:**	0
Hardware interrupt:	0	**Rising edge7**	Rising edge7		
PROFINET interface [X1]\Digital inputs\Channel7					
Enable falling edge detection	0	**Prefix Event Falling Edge**	49287	**Event name:**	0
Hardware interrupt:	0	**Falling edge7**	Falling edge7		
PROFINET interface [X1]\Digital inputs\Channel8					
Channel address	I1.0	**Input filters**	6.4 millisec	**Enable pulse catch**	0
PROFINET interface [X1]\Digital inputs\Channel8					
Enable rising edge detection	0	**Prefix Event Rising Edge**	49160	**Event name:**	0
Hardware interrupt:	0	**Rising edge8**	Rising edge8		
PROFINET interface [X1]\Digital inputs\Channel8					
Enable falling edge detection	0	**Prefix Event Falling Edge**	49288	**Event name:**	0
Hardware interrupt:	0	**Falling edge8**	Falling edge8		
PROFINET interface [X1]\Digital inputs\Channel9					
Channel address	I1.1	**Input filters**	6.4 millisec	**Enable pulse catch**	0
PROFINET interface [X1]\Digital inputs\Channel9					
Enable rising edge detection	0	**Prefix Event Rising Edge**	49161	**Event name:**	0
Hardware interrupt:	0	**Rising edge9**	Rising edge9		
PROFINET interface [X1]\Digital inputs\Channel9					
Enable falling edge detection	0	**Prefix Event Falling Edge**	49289	**Event name:**	0
Hardware interrupt:	0	**Falling edge9**	Falling edge9		
PROFINET interface [X1]\Digital inputs\Channel10					
Channel address	I1.2	**Input filters**	6.4 millisec	**Enable pulse catch**	0
PROFINET interface [X1]\Digital inputs\Channel10					
Enable rising edge detection	0	**Prefix Event Rising Edge**	49162	**Event name:**	0
Hardware interrupt:	0	**Rising edge10**	Rising edge10		
PROFINET interface [X1]\Digital inputs\Channel10					
Enable falling edge detection	0	**Prefix Event Falling Edge**	49290	**Event name:**	0
Hardware interrupt:	0	**Falling edge10**	Falling edge10		
PROFINET interface [X1]\Digital inputs\Channel11					
Channel address	I1.3	**Input filters**	6.4 millisec	**Enable pulse catch**	0
PROFINET interface [X1]\Digital inputs\Channel11					
Enable rising edge detection	0	**Prefix Event Rising Edge**	49163	**Event name:**	0
Hardware interrupt:	0	**Rising edge11**	Rising edge11		
PROFINET interface [X1]\Digital inputs\Channel11					
Enable falling edge detection	0	**Prefix Event Falling Edge**	49291	**Event name:**	0
Hardware interrupt:	0	**Falling edge11**	Falling edge11		
PROFINET interface [X1]\Digital inputs\Channel12					
Channel address	I1.4	**Input filters**	6.4 millisec	**Enable pulse catch**	0
PROFINET interface [X1]\Digital inputs\Channel13					
Channel address	I1.5	**Input filters**	6.4 millisec	**Enable pulse catch**	0

PROFINET interface [X1]\Analog inputs\Noise reduction					
Integration time	50 Hz (20 ms)				
PROFINET interface [X1]\Analog inputs\Channel0					
Channel address	IW64	**Measurement type**	Voltage	**Voltage range**	0..10 V
Smoothing	Weak (4 cycles)			**Enable overflow diagnostics**	1
PROFINET interface [X1]\Analog inputs\Channel1					
Channel address	IW66	**Measurement type**	Voltage	**Voltage range**	0..10 V
Smoothing	Weak (4 cycles)			**Enable overflow diagnostics**	1
PROFINET interface [X1]\Digital outputs					
Reaction to CPU STOP	Use substitute value				
PROFINET interface [X1]\Digital outputs\Channel0					
Channel address	Q0.0	**Substitute a value of 1 on a change from RUN to STOP.**	0		
PROFINET interface [X1]\Digital outputs\Channel1					
Channel address	Q0.1	**Substitute a value of 1 on a change from RUN to STOP.**	0		
PROFINET interface [X1]\Digital outputs\Channel2					
Channel address	Q0.2	**Substitute a value of 1 on a change from RUN to STOP.**	0		
PROFINET interface [X1]\Digital outputs\Channel3					
Channel address	Q0.3	**Substitute a value of 1 on a change from RUN to STOP.**	0		
PROFINET interface [X1]\Digital outputs\Channel4					
Channel address	Q0.4	**Substitute a value of 1 on a change from RUN to STOP.**	0		
PROFINET interface [X1]\Digital outputs\Channel5					
Channel address	Q0.5	**Substitute a value of 1 on a change from RUN to STOP.**	0		
PROFINET interface [X1]\Digital outputs\Channel6					
Channel address	Q0.6	**Substitute a value of 1 on a change from RUN to STOP.**	0		
PROFINET interface [X1]\Digital outputs\Channel7					
Channel address	Q0.7	**Substitute a value of 1 on a change from RUN to STOP.**	0		
PROFINET interface [X1]\Digital outputs\Channel8					
Channel address	Q1.0	**Substitute a value of 1 on a change from RUN to STOP.**	0		
PROFINET interface [X1]\Digital outputs\Channel9					
Channel address	Q1.1	**Substitute a value of 1 on a change from RUN to STOP.**	0		
PROFINET interface [X1]\Operating mode					
IO controller	True	**IO system**		**Device number**	0
IO device	False				
PROFINET interface [X1]\Analog outputs					
Reaction to CPU STOP	Use substitute value				
PROFINET interface [X1]\Analog outputs\Channel0					
Channel address	QW64	**Analog output type**	Current	**Current range**	0..20 mA
Substitute value for channel on a change from RUN to STOP	0.000mA			**Enable overflow diagnostics**	1
Enable underflow diagnostics	1				
PROFINET interface [X1]\Analog outputs\Channel1					
Channel address	QW66	**Analog output type**	Current	**Current range**	0..20 mA
Substitute value for channel on a change from RUN to STOP	0.000mA			**Enable overflow diagnostics**	1
Enable underflow diagnostics	1				
PROFINET interface [X1]\I/O addresses\Input addresses					
Start address	0.0	**End address**	1.7	**Organization block**	65535
Process image	65535				
PROFINET interface [X1]\I/O addresses\Input addresses					
Start address	64	**End address**	67	**Organization block**	0
Process image	0				
PROFINET interface [X1]\I/O addresses\Output addresses					
Start address	0.0	**End address**	1.7	**Organization block**	0
Process image	0				
PROFINET interface [X1]\I/O addresses\Output addresses					
Start address	64	**End address**	67	**Organization block**	0
Process image	0				
PROFINET interface [X1]\Advanced options\Interface options					
Support device replacement without exchangeable medium	True	**Permit overwriting of device names of all assigned IO devices**	False	**Use IEC V2.2 LLDP mode**	False
Keep-Alive connection monitoring:	30s				

PROFINET interface [X1]\Advanced options\Media redundancy					
MRP domain	mrpdomain-1	**Media redundancy role:**	Not device in the ring		
PROFINET interface [X1]\Advanced options\Real time settings\IO communication					
Send clock:	1.000ms				
PROFINET interface [X1]\Advanced options\Real time settings\Real time options					
Calculated bandwidth for cyclic IO data:	0.000ms	**Calculated bandwidth for cyclic IO data:**	0.000%		
PROFINET interface [X1]\Advanced options\Port [X1 P1]\General					
Name	Port_1	**Author**	i72014	**Comment**	
PROFINET interface [X1]\Advanced options\Port [X1 P1]\Port interconnection\Local port:					
Local port:	PLC_1\PROFINET-Schnittstelle_1 [X1]\Port_1 [X1 P1R]	**Medium:**	Copper	**Cable name:**	---
		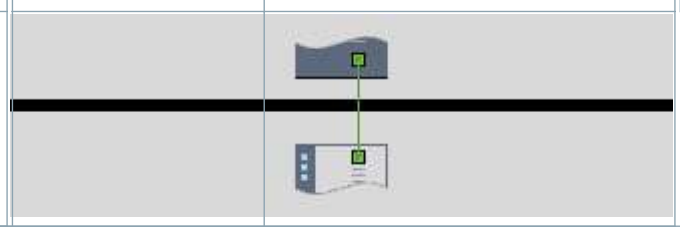			
PROFINET interface [X1]\Advanced options\Port [X1 P1]\Port interconnection\Partner port:					
	Monitoring of partner port is not possible	**Partner port:**	Any partner		
PROFINET interface [X1]\Advanced options\Port [X1 P1]\Port options\Activate					
Activate this port for use	True				
PROFINET interface [X1]\Advanced options\Port [X1 P1]\Port options\Connection					
Transmission rate / duplex:	Automatic	**Monitor**	False	**Enable autonegotiation**	True
PROFINET interface [X1]\Advanced options\Port [X1 P1]\Port options\Boundaries					
End of detection of accessible devices	False	**End of topology discovery**	False	**End of the sync domain**	False
PROFINET interface [X1]\Advanced options\Port [X1 P2]\General					
Name	Port_2	**Author**	helpf	**Comment**	
PROFINET interface [X1]\Advanced options\Port [X1 P2]\Port interconnection\Local port:					
Local port:	PLC_1\PROFINET-Schnittstelle_1 [X1]\Port_2 [X1 P2R]	**Medium:**	Copper	**Cable name:**	---
		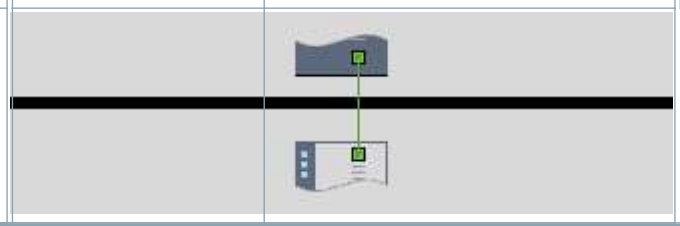			
PROFINET interface [X1]\Advanced options\Port [X1 P2]\Port interconnection\Partner port:					
	Monitoring of partner port is not possible	**Partner port:**	Any partner		
PROFINET interface [X1]\Advanced options\Port [X1 P2]\Port options\Activate					
Activate this port for use	True				
PROFINET interface [X1]\Advanced options\Port [X1 P2]\Port options\Connection					
Transmission rate / duplex:	Automatic	**Monitor**	False	**Enable autonegotiation**	True
PROFINET interface [X1]\Advanced options\Port [X1 P2]\Port options\Boundaries					
End of detection of accessible devices	False	**End of topology discovery**	False	**End of the sync domain**	False
PROFINET interface [X1]\Web server access					
Enable Web server for the IP address of this interface	False	**The Web server must also be activated in the properties of the PLC.**			
High speed counters (HSC)\HSC1\General\Enable					
Enable this high speed counter	0	**Enable this high speed counter**	0	**Enable this high speed counter**	0
Enable this high speed counter	0	**Enable this high speed counter**	0	**Enable this high speed counter**	0
High speed counters (HSC)\HSC1\General\Project information					
Name	HSC_1	**Comment**		**Name**	HSC_2
Comment		**Name**	HSC_3	**Comment**	
Name	HSC_4	**Comment**		**Name**	HSC_5
Comment		**Name**	HSC_6	**Comment**	
High speed counters (HSC)\HSC1\I/O addresses\Input addresses					
Start address	1000.0	**End address**	1003.7	**Start address**	1004.0
End address	1007.7	**Organization block**	0	**Start address**	1008.0
End address	1011.7	**Organization block**	0	**Process image**	0
Start address	1012.0	**End address**	1015.7	**Organization block**	0
Process image	0	**Start address**	1016.0	**End address**	1019.7
Organization block	0	**Process image**	0	**Start address**	1020.0
End address	1023.7	**Organization block**	0	**Process image**	0
Organization block	0	**Process image**	0	**Process image**	0
Pulse generators (PTO/PWM)\PTO1/PWM1\General\Enable					
Enable this pulse generator	0	**Enable this pulse generator**	0		
Pulse generators (PTO/PWM)\PTO1/PWM1\General\Project information					
Name	Pulse_1	**Comment**		**Name**	Pulse_2
Comment					
Pulse generators (PTO/PWM)\PTO1/PWM1\I/O addresses\Output addresses					
Start address	1000.0	**End address**	1001.7	**Start address**	1002.0
End address	1003.7	**Organization block**	0	**Organization block**	0

Process image	0	**Process image**	0		
Startup					
Startup after POWER ON	Warm restart - mode before POWER OFF	**Comparison preset to actual configuration**	Startup CPU even if mismatch	**Configuration time**	60000ms
OBs should be interruptible	1				
Cycle					
Cycle monitoring time [ms]	150ms			**Enable minimum cycle time for cyclic OBs**	1
Minimum cycle time	30ms				
Communication load					
Cycle load due to communication [%]	20%				
System and clock memory\System memory bits					
Enable the use of system memory byte	0	**Address of system memory byte (MBx)**	1	**First cycle**	
Diagnostic status changed		**Always 1 (high)**		**Always 0 (low)**	
System and clock memory\Clock memory bits					
Enable the use of clock memory byte	0	**Address of clock memory byte (MBx)**	0	**10 Hz clock**	
5 Hz clock		**2.5 Hz clock**		**2 Hz clock**	
1.25 Hz clock		**1 Hz clock**		**0.625 Hz clock**	
0.5 Hz clock					
Web server\General					
Activate Web server on all modules of this device	False	**Permit access only with HTTPS**	True		
Web server\Automatic update					
Enable automatic update	True	**Update interval**	0s		
Web server\User-defined web pages					
Application name	**HTML source path**	**Default HTML page**	**Files with dynamic content**	**Web DB number**	**Fragment DB number**
		index.htm	.htm;.html	333	334
Web server\Overview of interfaces					
Device		**Interface**		**Enabled web server access**	
PLC_1		PROFINET-Schnittstelle_1		False	
User interface languages					
Assign project language			**User interface languages**		
German (Germany)			German		
German (Germany)			English		
German (Germany)			French		
German (Germany)			Spanish		
German (Germany)			Italian		
German (Germany)			Chinese (simplified)		
Time of day\Local time					
Time zone	(UTC +01:00) Berlin, Bern, Brussels, Rome, Stockholm, Vienna				
Time of day\Daylight saving time					
Activate daylight saving time	1	**Difference between standard and daylight saving time**	60min		
Time of day\Daylight saving time\Start of daylight saving time					
First week of the month:	Last		Sunday	**in**	March
at	1:00 a.m.				
Time of day\Daylight saving time\Start of standard time					
	Last		Sunday	**in**	October
at	2:00 a.m.				
Protection & Security					
Level of protection	No protection				
Protection & Security\Connection mechanisms\Permit access with PUT/GET communication from remote partner					
Permit access with PUT/GET communication from remote partner	True				
Protection & Security\Syslog					
Enable transfer of syslog messages to a syslog server	False				
Protection & Security\Security event					
Summarize diagnostics in case of high message volume	True	**Length of an interval**	20	**Unit**	seconds
Protection & Security\External load memory					
Disable copying from internal load memory to external load memory	False				
Advanced configuration\DnsParameterConfigurationMenu					
The TreeNode DnsConfigurationMenu was not filled by some ACF					
Advanced configuration\Configuration control\Configuration control for central configuration					
Allow to reconfigure the device via the user program	0				

Advanced configuration\SNMP\SNMP configuration (Simple Network Management Protocol).					
Activate SNMP	True	**Read-only community string:**	public	**Read-write community string:**	private

Configuration control\Configuration control for central configuration	
Allow to reconfigure the device via the user program	0

Connection resources

	Station resources - Reserved - Maximum	Station resources - Reserved - Configured	Station resources - Dynamic - Configured	Module resources - PLC_1 [CPU 1217C DC/DC/DC] - Configured
Maximum number of resources:		34	34	68
	Maximum	Configured	Configured	Configured
PG communication:	4	-	-	-
HMI communication:	12	0	0	0
S7 communication:	8	0	0	0
Open user communication:	8	1	0	1
Web communication:	2	-	-	-
OPC UA client/server communication:	0	-	-	-
Other communication:	-	-	0	0
Total resources used:		1	0	1
Available resources:		33	34	67

Overview of addresses\Overview of addresses\Overview of addresses					
Inputs	True	**Outputs**	True	**Address gaps**	False
Slot	True				

Type	Addr. from	Addr. to	Module	PIP	Device name	Device number	Size	Master / IO system	Rack	Slot
I	0	1	DI 14/DQ 10_1	None	PLC_1 [CPU 1217C DC/DC/DC]	-	2 Bytes	-	0	1 1
O	0	1	DI 14/DQ 10_1	Automatic update	PLC_1 [CPU 1217C DC/DC/DC]	-	2 Bytes	-	0	1 1
I	64	67	AI 2/AQ 2_1	Automatic update	PLC_1 [CPU 1217C DC/DC/DC]	-	4 Bytes	-	0	1 2
O	64	67	AI 2/AQ 2_1	Automatic update	PLC_1 [CPU 1217C DC/DC/DC]	-	4 Bytes	-	0	1 2
I	1000	1003	HSC_1	Automatic update	PLC_1 [CPU 1217C DC/DC/DC]	-	4 Bytes	-	0	1 16
I	1004	1007	HSC_2	Automatic update	PLC_1 [CPU 1217C DC/DC/DC]	-	4 Bytes	-	0	1 17
I	1008	1011	HSC_3	Automatic update	PLC_1 [CPU 1217C DC/DC/DC]	-	4 Bytes	-	0	1 18
I	1012	1015	HSC_4	Automatic update	PLC_1 [CPU 1217C DC/DC/DC]	-	4 Bytes	-	0	1 19
I	1016	1019	HSC_5	Automatic update	PLC_1 [CPU 1217C DC/DC/DC]	-	4 Bytes	-	0	1 20
I	1020	1023	HSC_6	Automatic update	PLC_1 [CPU 1217C DC/DC/DC]	-	4 Bytes	-	0	1 21
O	1000	1001	Pulse_1	Automatic update	PLC_1 [CPU 1217C DC/DC/DC]	-	2 Bytes	-	0	1 32
O	1002	1003	Pulse_2	Automatic update	PLC_1 [CPU 1217C DC/DC/DC]	-	2 Bytes	-	0	1 33
O	1004	1005	Pulse_3	Automatic update	PLC_1 [CPU 1217C DC/DC/DC]	-	2 Bytes	-	0	1 34
O	1006	1007	Pulse_4	Automatic update	PLC_1 [CPU 1217C DC/DC/DC]	-	2 Bytes	-	0	1 35
I	2	2	DI 8x24VDC_1	Automatic update	PLC_1 [CPU 1217C DC/DC/DC]	-	1 Bytes	-	0	2
O	2	3	DQ 16x24VDC_2	Automatic update	PLC_1 [CPU 1217C DC/DC/DC]	-	2 Bytes	-	0	3
O	4	5	DQ 16x24VDC_1	Automatic update	PLC_1 [CPU 1217C DC/DC/DC]	-	2 Bytes	-	0	4
I	32	47	AI 8x13BIT_1	Automatic update	PLC_1 [CPU 1217C DC/DC/DC]	-	16 Bytes	-	0	5
I	48	63	AI 8x13BIT_2	Automatic update	PLC_1 [CPU 1217C DC/DC/DC]	-	16 Bytes	-	0	6
O	36	43	AQ 4x14BIT_1	Automatic update	PLC_1 [CPU 1217C DC/DC/DC]	-	8 Bytes	-	0	7
O	44	51	AQ 4x14BIT_2	Automatic update	PLC_1 [CPU 1217C DC/DC/DC]	-	8 Bytes	-	0	8
O	52	59	AQ 4x14BIT_3	Automatic update	PLC_1 [CPU 1217C DC/DC/DC]	-	8 Bytes	-	0	9

PLC_1 [CPU 1217C DC/DC/DC] / Program blocks

MHJ-PLC-Lab-Function-S71200 [FC9000]

MHJ-PLC-Lab-Function-S71200 Properties							
General							
Name	MHJ-PLC-Lab-Function-S71200	**Number**	9000	**Type**	FC	**Language**	SCL
Numbering	Manual						
Information							
Title		**Author**		**Comment**		**Family**	
Version	0.1	**User-defined ID**					

Name	Data type	Default value	Comment
Input			
Output			
InOut			
Temp			
rdTimeReturn	Int		
outputTime	DTL		
YEAR	UInt		
MONTH	USInt		
DAY	USInt		
WEEKDAY	USInt		
HOUR	USInt		
MINUTE	USInt		
SECOND	USInt		
NANOSECOND	UDInt		
SyncVal	Byte		
forVal	Int		
forVal_2	Int		
Value	Byte		
Constant			
CompVal	Byte	16#34	
Value_01	Byte	16#11	
Value_01_DW	DWord	16#A165_D992	
Value_02_DW	DWord	16#58BE_4401	
Return			
MHJ-PLC-Lab-Function-S71200	Void		

```
0001
0002 #Value:=PEEK(area := 16#82,
0003    dbNumber := 0,
0004    byteOffset := 511);
0005 #Value := #Value + 1;
0006
0007 POKE(area := 16#82,
0008    dbNumber := 0,
0009    byteOffset := 511,
0010    value := #Value);
0011
0012 POKE(area:=16#81,
0013    dbNumber:=0,
0014    byteOffset:=1016,
0015    value:=#Value_01_DW);
0016 POKE(area := 16#81,
0017    dbNumber := 0,
0018    byteOffset := 1020,
0019    value := #Value_02_DW);
0020
0021 POKE(area := 16#81,
0022    dbNumber := 0,
0023    byteOffset := 511,
0024    value := B#16#00);
0025
0026 FOR #forVal := 0 TO 120 DO
0027   FOR #forVal_2:=0 TO 10 DO
0028     #rdTimeReturn:=RD_SYS_T(#outputTime);
0029     #rdTimeReturn := WR_SYS_T(#outputTime);
0030     #rdTimeReturn := RD_SYS_T(#outputTime);
0031     #rdTimeReturn := WR_SYS_T(#outputTime);
0032   END_FOR;
0033   #SyncVal:= PEEK(area := 16#81,
0034            dbNumber := 0,
0035            byteOffset := 511);
0036   IF #SyncVal = #CompVal THEN
0037      GOTO M_1;
0038   END_IF;
0039 END_FOR;
0040 RETURN;
0041
0042 M_1:
0043 POKE(area := 16#81,
```

```
0044     dbNumber := 0,
0045     byteOffset := 511,
0046     value := B#16#0);
0047
0048
0049
```

Symbol	Address	Type	Comment
#CompVal	16#34	Byte	
#forVal		Int	
#forVal_2		Int	
#outputTime		DTL	
#rdTimeReturn		Int	
#SyncVal		Byte	
#Value		Byte	
#Value_01_DW	16#A165_D992	DWord	
#Value_02_DW	16#58BE_4401	DWord	

PLC_1 [CPU 1217C DC/DC/DC] / Program blocks

Main [OB1]

Main Properties							
General							
Name	Main	**Number**	1	**Type**	OB	**Language**	LAD
Numbering	Automatic						
Information							
Title	"Main Program Sweep (Cycle)"	**Author**		**Comment**		**Family**	
Version	0.1	**User-defined ID**					

Name	Data type	Default value	Comment
Input			
Initial_Call	Bool		Initial call of this OB
Remanence	Bool		=True, if remanent data are available
Temp			
Constant			

Network 1: Factory IO Communicator(DONT DELETE)

#Deutsch (#English below)
Im Netzwerk 1 wird der Konnektierungsbaustein für PLC-Lab aufgerufen.
Dieser Aufruf darf nicht entfernt werden!

#English
The connection block for PLC-Lab is called up in network 1.
This call must not be removed!

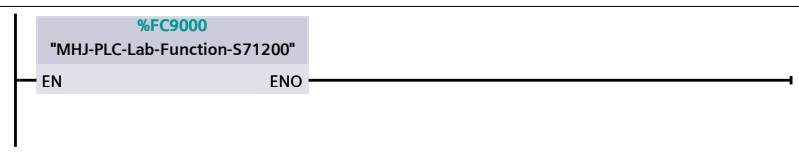

Network 2: Item Transfer Package Line

When the Stacker arrives to the loading pt, stops for 5s and proceed

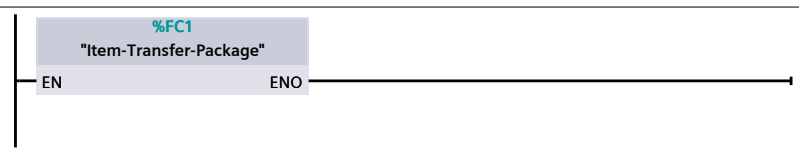

Network 3: Component Assembly Line

Network 4: Supply Storage Line

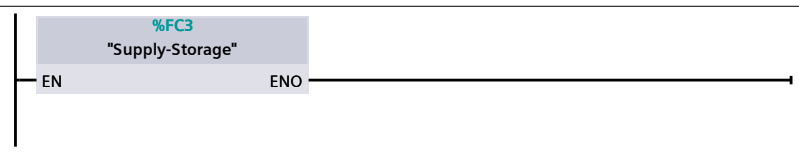

Network 5: Palletizer

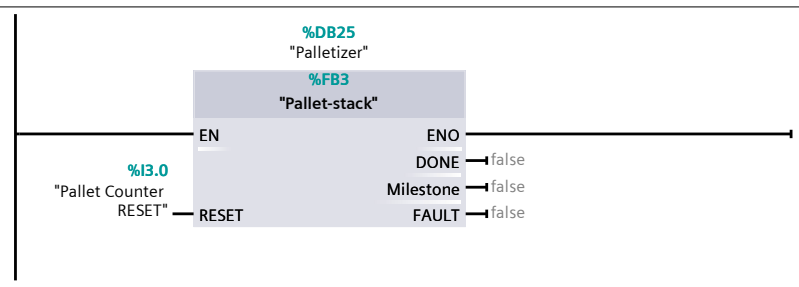

Network 6: Pallet Loading line

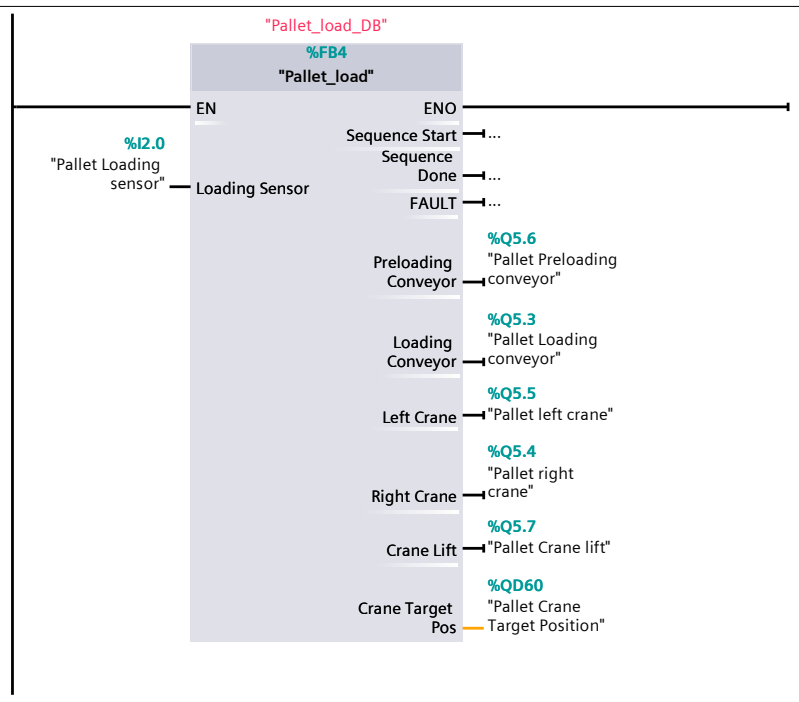
"Pallet_load_DB"
%FB4
"Pallet_load"
EN
ENO
%I2.0
"Pallet Loading sensor"
Loading Sensor
Sequence Start
Sequence Done
FAULT
Preloading Conveyor
%Q5.6
"Pallet Preloading conveyor"
Loading Conveyor
%Q5.3
"Pallet Loading conveyor"
Left Crane
%Q5.5
"Pallet left crane"
Right Crane
%Q5.4
"Pallet right crane"
Crane Lift
%Q5.7
"Pallet Crane lift"
Crane Target Pos
%QD60
"Pallet Crane Target Position"

PLC_1 [CPU 1217C DC/DC/DC] / Program blocks

Item-Transfer-Package [FC1]

Item-Transfer-Package Properties							
General							
Name	Item-Transfer-Package	**Number**	1	**Type**	FC	**Language**	LAD
Numbering	Automatic						
Information							
Title		**Author**		**Comment**		**Family**	
Version	0.1	**User-defined ID**					

Name	Data type	Default value	Comment
Input			
Output			
InOut			
Temp			
Constant			
Return			
Item-Transfer-Package	Void		

Network 1: Item Packaging

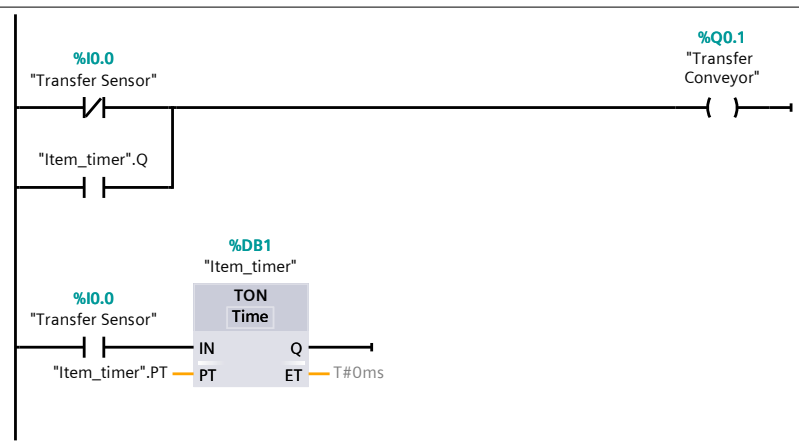

Network 2: Cart Redirect

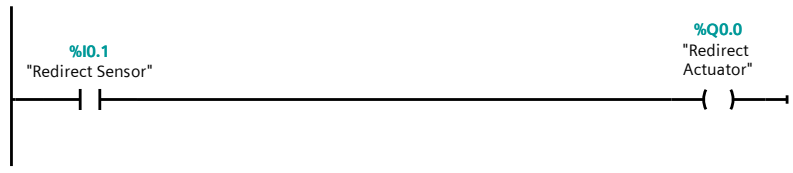

Network 3: Component transfer

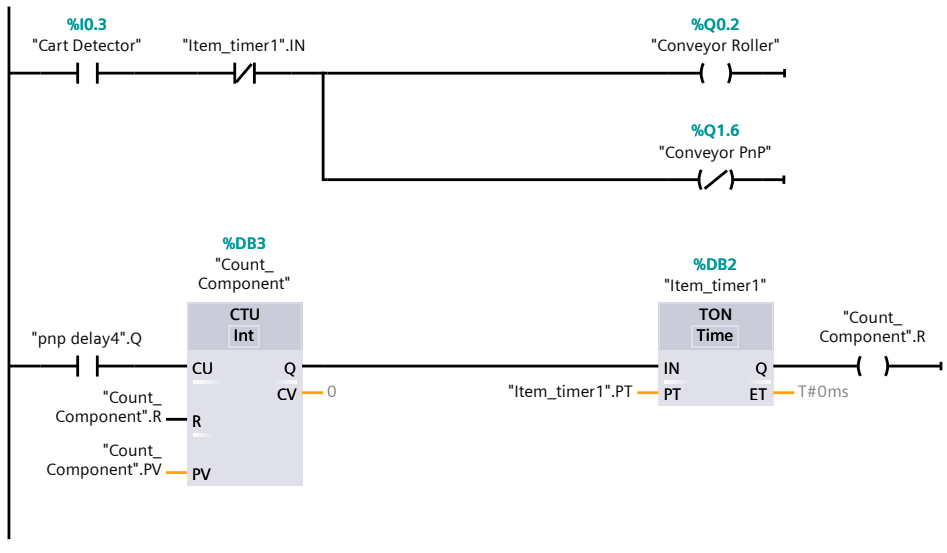

Network 4: pick and place algorithm pt1

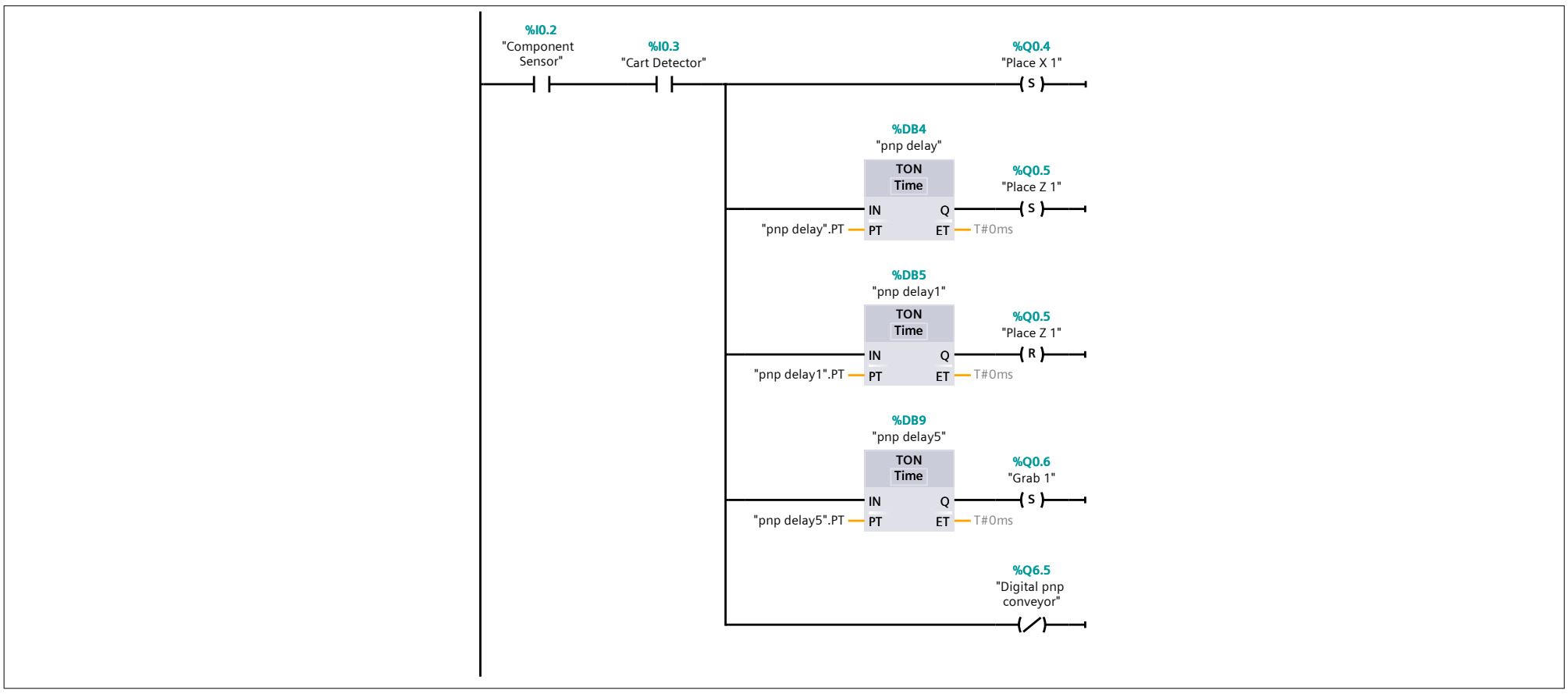

Network 5: pick and place algorithm pt2

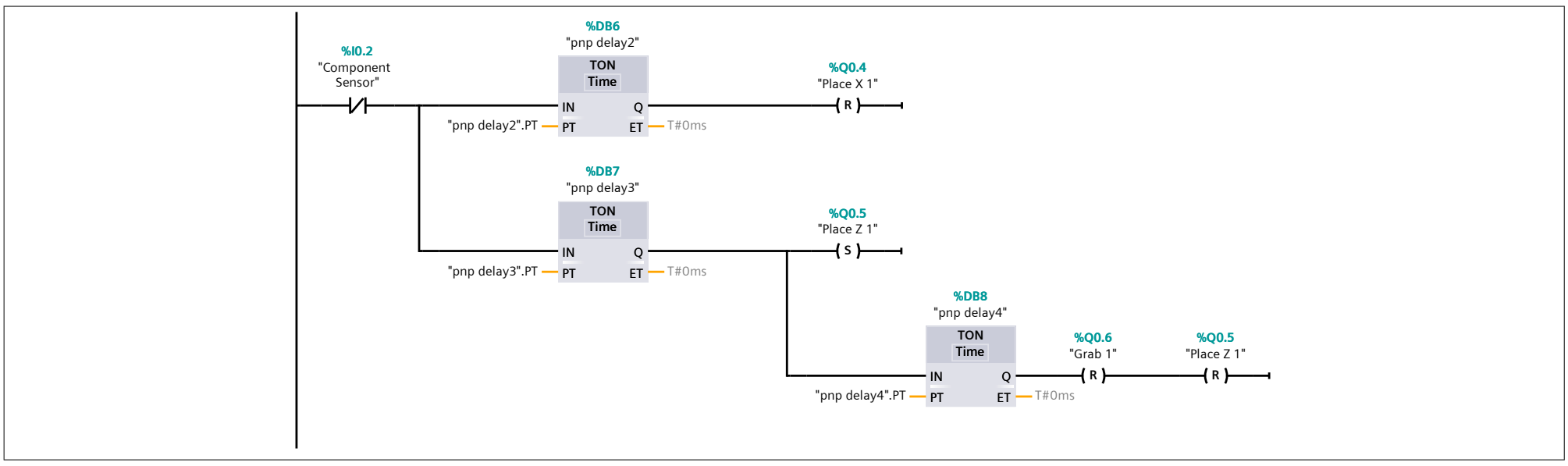

Network 6:

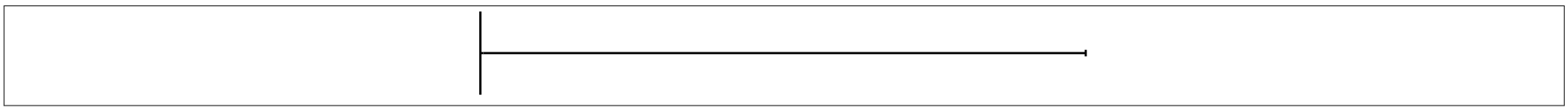

PLC_1 [CPU 1217C DC/DC/DC] / Program blocks

Component-Assembly [FC2]

Component-Assembly Properties							
General							
Name	Component-Assembly	**Number**	2	**Type**	FC	**Language**	LAD
Numbering	Automatic						
Information							
Title		**Author**		**Comment**		**Family**	
Version	0.1	**User-defined ID**					

Name	Data type	Default value	Comment
Input			
Output			
InOut			
Temp			
Constant			
Return			
Component-Assembly	Void		

Network 1: Pusher Trigger

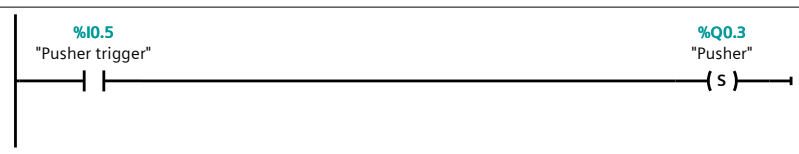

Network 2: Pusher Actuator

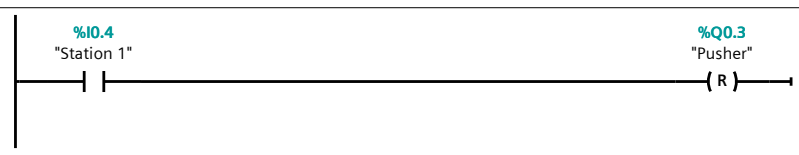

Network 3: Arm sorter

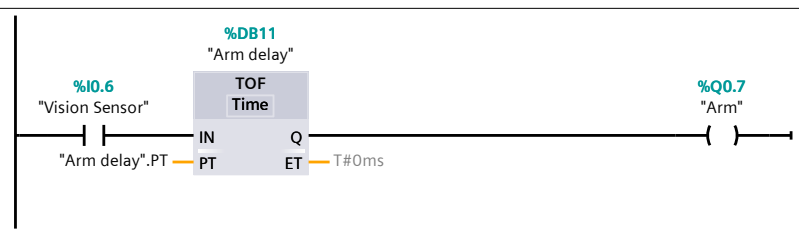

Network 4: Clamp algorithm

Component active

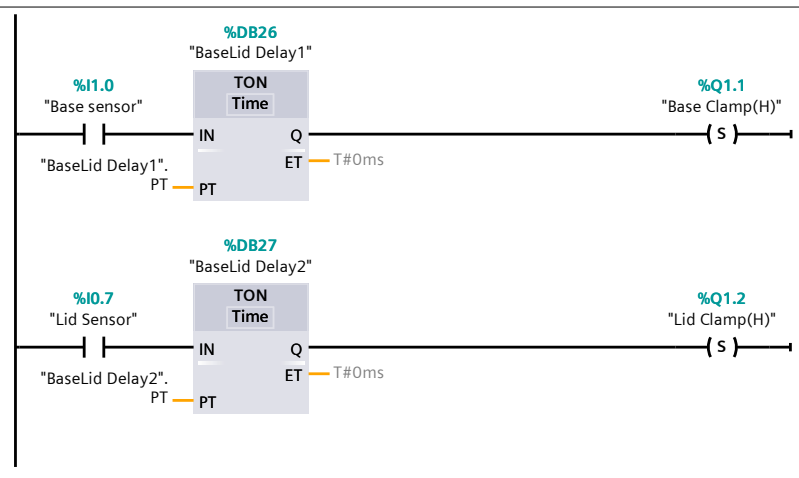

Network 5: Pick and place algorithm + Component Assembly

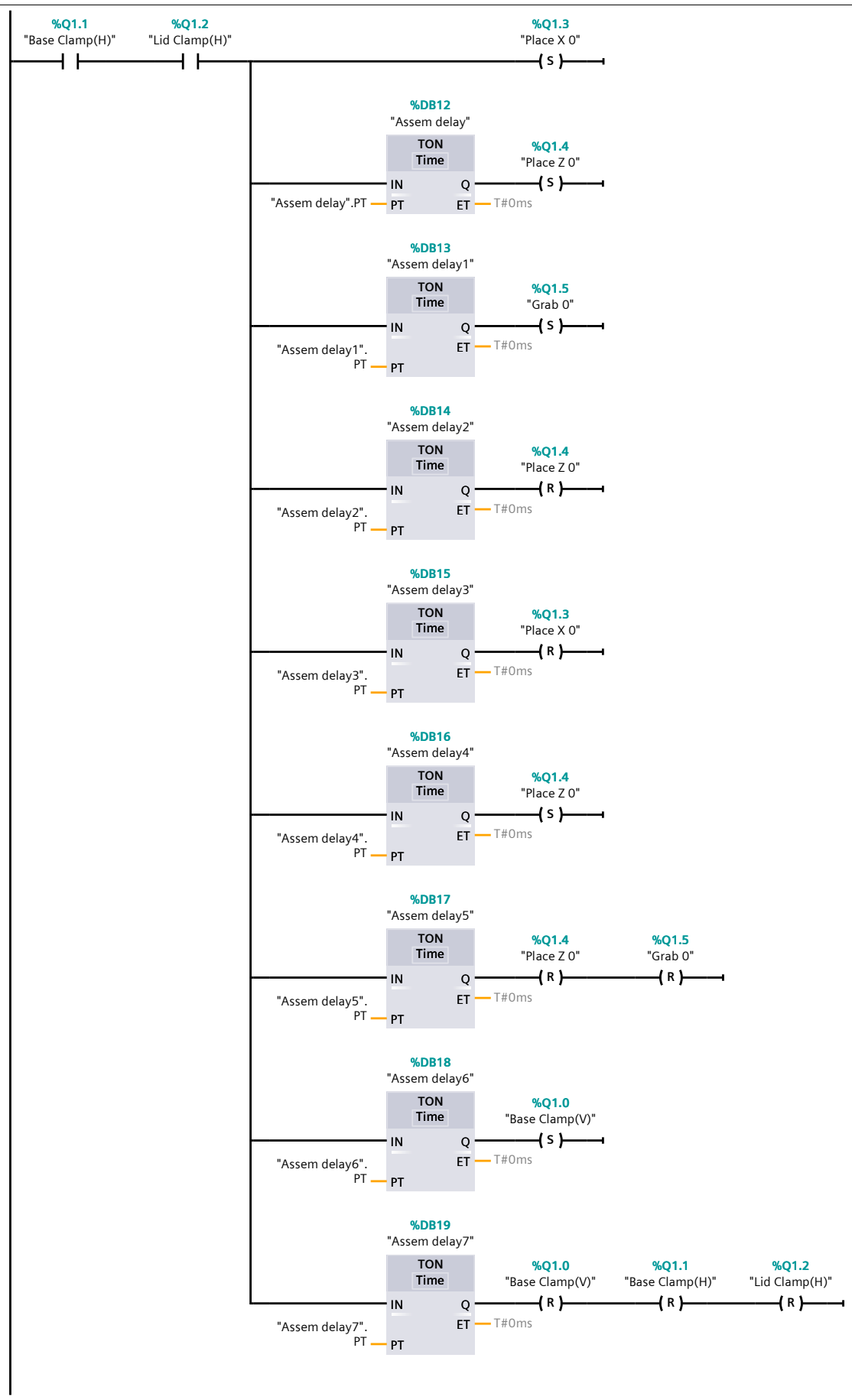
%Q1.1
"Base Clamp(H)"
%Q1.2
"Lid Clamp(H)"
%Q1.3
"Place X 0"
S
%DB12
"Assem delay"
TON
Time
IN
Q
PT
ET
"Assem delay".PT
T#0ms
%Q1.4
"Place Z 0"
S
%DB13
"Assem delay1"
TON
Time
IN
Q
PT
ET
"Assem delay1".
PT
T#0ms
%Q1.5
"Grab 0"
S
%DB14
"Assem delay2"
TON
Time
IN
Q
PT
ET
"Assem delay2".
PT
T#0ms
%Q1.4
"Place Z 0"
R
%DB15
"Assem delay3"
TON
Time
IN
Q
PT
ET
"Assem delay3".
PT
T#0ms
%Q1.3
"Place X 0"
R
%DB16
"Assem delay4"
TON
Time
IN
Q
PT
ET
"Assem delay4".
PT
T#0ms
%Q1.4
"Place Z 0"
S
%DB17
"Assem delay5"
TON
Time
IN
Q
PT
ET
"Assem delay5".
PT
T#0ms
%Q1.4
"Place Z 0"
R
%Q1.5
"Grab 0"
R
%DB18
"Assem delay6"
TON
Time
IN
Q
PT
ET
"Assem delay6".
PT
T#0ms
%Q1.0
"Base Clamp(V)"
S
%DB19
"Assem delay7"
TON
Time
IN
Q
PT
ET
"Assem delay7".
PT
T#0ms
%Q1.0
"Base Clamp(V)"
R
%Q1.1
"Base Clamp(H)"
R
%Q1.2
"Lid Clamp(H)"
R

PLC_1 [CPU 1217C DC/DC/DC] / Program blocks

Supply-Storage [FC3]

Supply-Storage Properties							
General							
Name	Supply-Storage	**Number**	3	**Type**	FC	**Language**	LAD
Numbering	Automatic						
Information							
Title		**Author**		**Comment**		**Family**	
Version	0.1	**User-defined ID**					

Name	Data type	Default value	Comment
Input			
Output			
InOut			
Temp			
ptrig	Bool		
Constant			
Return			
Supply-Storage	Void		

Network 1: Conveyor scale Retrigger

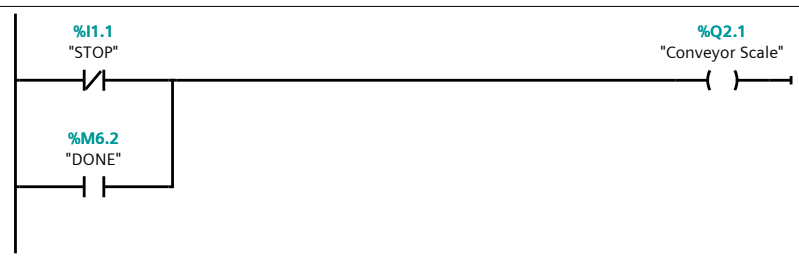

Network 2: Box Stopper Retrigger

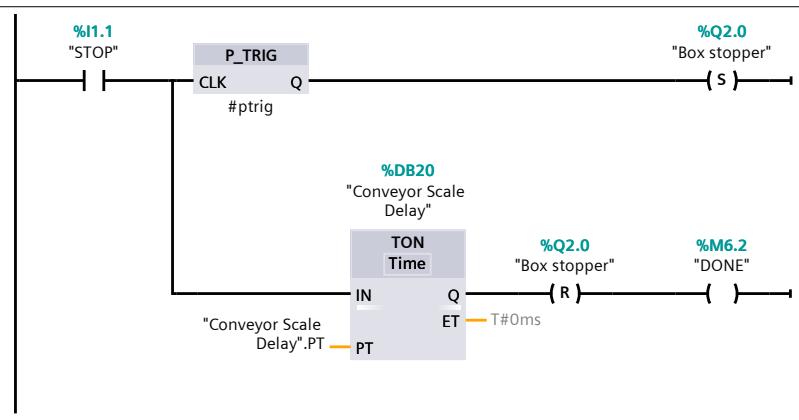

Network 3: Box Arm sorter by weight

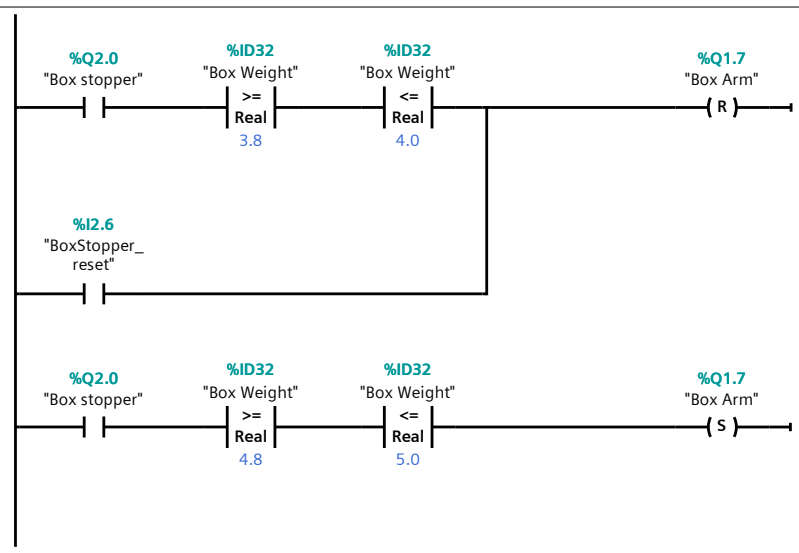

Network 4: PnP Conveyor Control

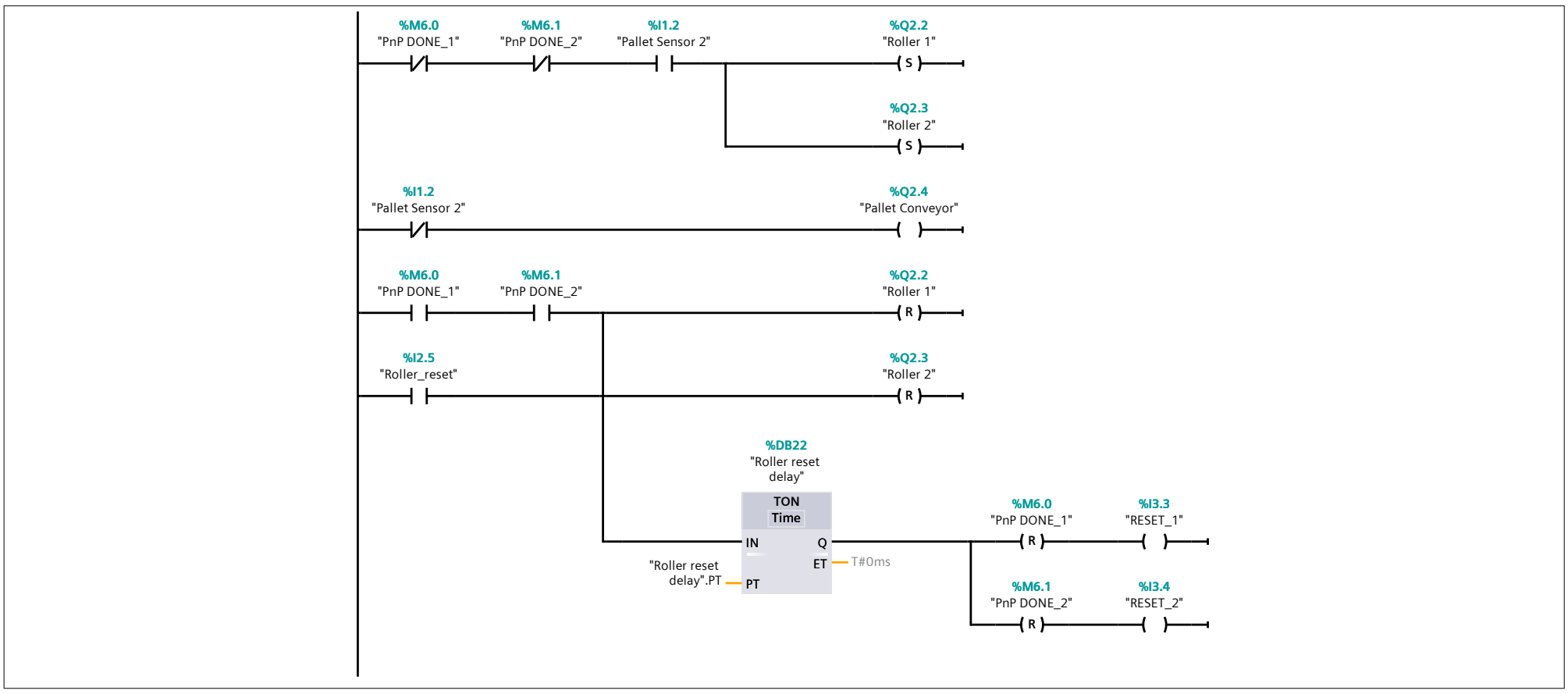

Network 5: Pick and Place XYZ analog 1

Station 1

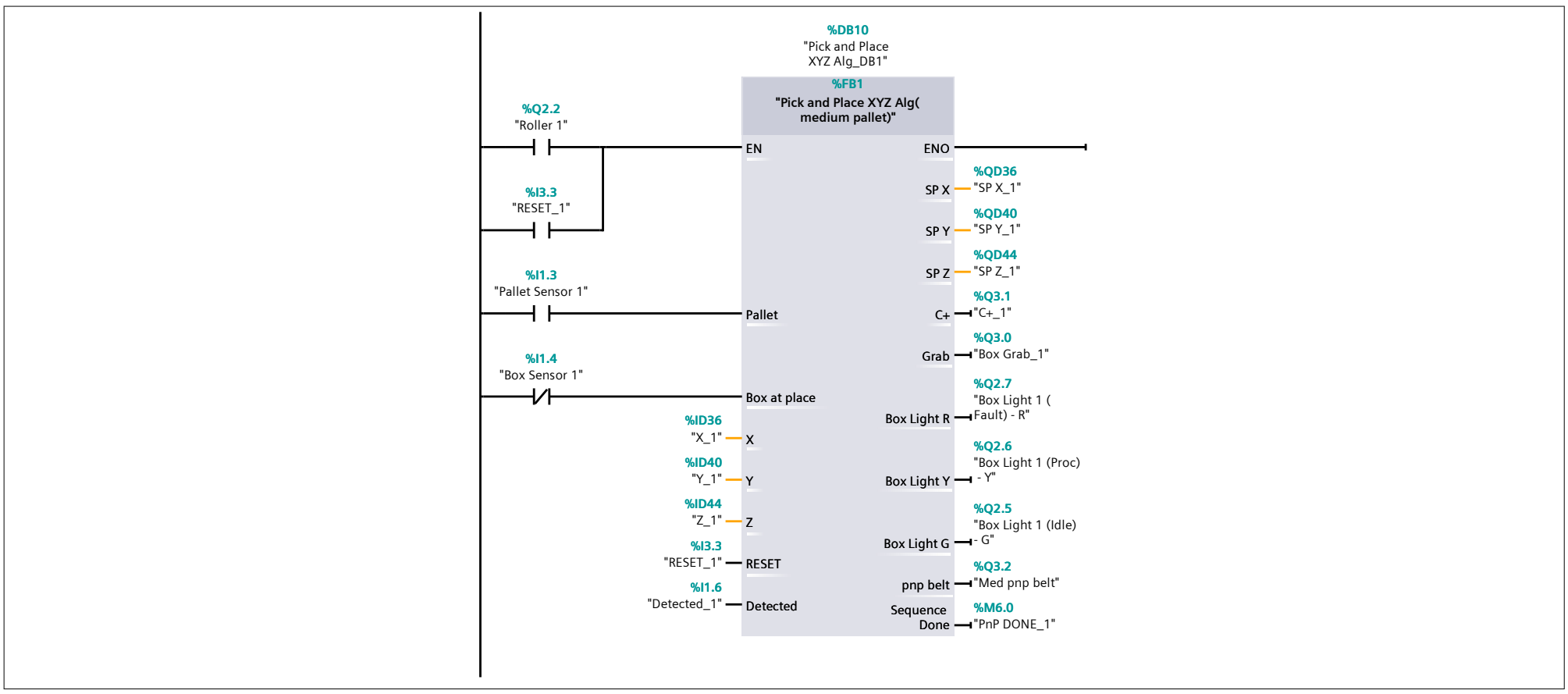

Network 6: Pick and Place XYZ analog 2

Station 2

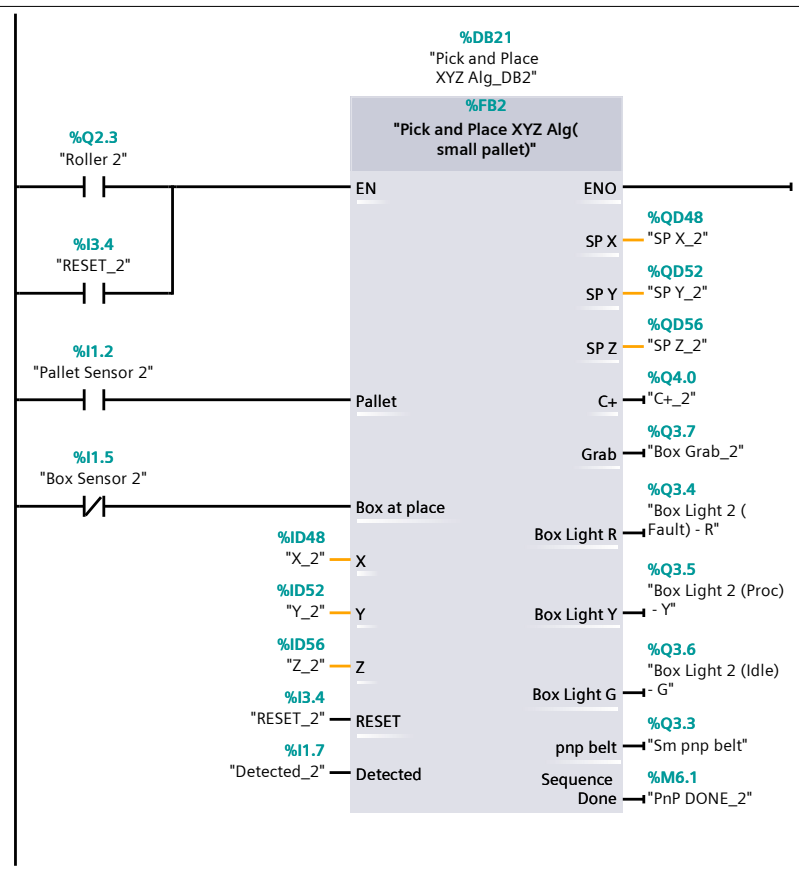

Network 7: Pallet_load

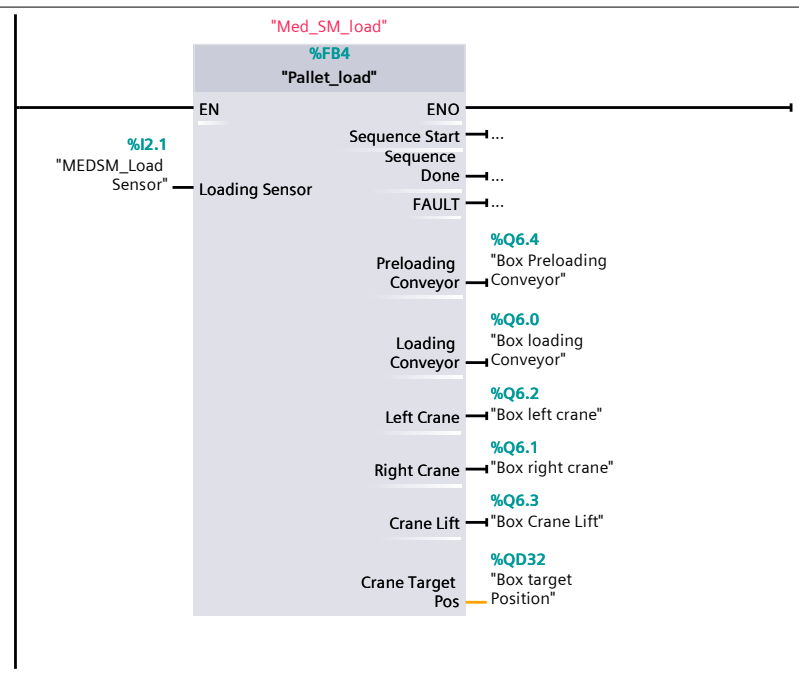

PLC_1 [CPU 1217C DC/DC/DC] / Program blocks

Pick and Place XYZ Alg(medium pallet) [FB1]

Pick and Place XYZ Alg(medium pallet) Properties							
General							
Name	Pick and Place XYZ Alg(medium pallet)	**Number**	1	**Type**	FB	**Language**	LAD
Numbering	Automatic						
Information							
Title		**Author**		**Comment**		**Family**	
Version	0.1	**User-defined ID**					

Name	Data type	Default value	Retain	Accessible from HMI/OPC UA/Web API	Writable from HMI/OPC UA/Web API	Visible in HMI engineering	Setpoint	Supervision	Comment
Input									
Pallet	Bool	false	Non-retain	True	True	True	False		
Box at place	Bool	false	Non-retain	True	True	True	False		
X	Real	0.0	Non-retain	True	True	True	False		
Y	Real	0.0	Non-retain	True	True	True	False		
Z	Real	0.0	Non-retain	True	True	True	False		
RESET	Bool	false	Non-retain	True	True	True	False		
Detected	Bool	false	Non-retain	True	True	True	False		
Output									
SP X	Real	0.0	Retain	True	True	True	False		
SP Y	Real	0.0	Retain	True	True	True	False		
SP Z	Real	0.0	Retain	True	True	True	False		
C+	Bool	false	Non-retain	True	True	True	False		
Grab	Bool	false	Non-retain	True	True	True	False		
Box Light R	Bool	false	Non-retain	True	True	True	False		
Box Light Y	Bool	false	Non-retain	True	True	True	False		
Box Light G	Bool	false	Non-retain	True	True	True	False		
pnp belt	Bool	false	Non-retain	True	True	True	False		
Sequence Done	Bool	false	Non-retain	True	True	True	False		
InOut									
Static									
C Limit	DInt	0	Non-retain	True	True	True	False		
FAULT	Bool	false	Non-retain	True	True	True	False		
Step	DInt	0	Non-retain	True	True	True	False		
Sequence Active	Bool	false	Non-retain	True	True	True	False		
ptrig[00]	Bool	false	Non-retain	False	False	False	False		
ptrig[0]	Bool	false	Non-retain	False	False	False	False		
ptrig[1]	Bool	false	Non-retain	False	False	False	False		
ptrig[2]	Bool	false	Non-retain	False	False	False	False		
ptrig[3]	Bool	false	Non-retain	False	False	False	False		
ptrig[4]	Bool	false	Non-retain	False	False	False	False		
ptrig[5]	Bool	false	Non-retain	False	False	False	False		
ptrig[6]	Bool	false	Non-retain	False	False	False	False		
ptrig[7]	Bool	false	Non-retain	False	False	False	False		
ptrig[8]	Bool	false	Non-retain	False	False	False	False		
ptrig[9]	Bool	false	Non-retain	False	False	False	False		
ptrig[10]	Bool	false	Non-retain	False	False	False	False		
ptrig[11]	Bool	false	Non-retain	False	False	False	False		
ptrig[12]	Bool	false	Non-retain	False	False	False	False		
ptrig[13]	Bool	false	Non-retain	False	False	False	False		
ptrig[14]	Bool	false	Non-retain	False	False	False	False		
ptrig[15]	Bool	false	Non-retain	False	False	False	False		
ptrig[16]	Bool	false	Non-retain	False	False	False	False		
ptrig[17]	Bool	false	Non-retain	False	False	False	False		
ptrig[18]	Bool	false	Non-retain	True	True	True	False		
ptrig[19]	Bool	false	Non-retain	True	True	True	False		
ptrig[20]	Bool	false	Non-retain	True	True	True	False		
ptrig[21]	Bool	false	Non-retain	True	True	True	False		
ptrig[22]	Bool	false	Non-retain	True	True	True	False		
Pnp Grab Delay	TON_TIME		Non-retain	True	True	True	True		
PT	Time	T#1s	Non-retain	True	True	True	False		
ET	Time	T#0ms	Non-retain	True	False	True	False		
IN	Bool	false	Non-retain	True	True	True	False		
Q	Bool	false	Non-retain	True	False	True	False		
Pnp Grab Delay2	TON_TIME		Non-retain	True	True	True	True		
PT	Time	T#1s	Non-retain	True	True	True	False		
ET	Time	T#0ms	Non-retain	True	False	True	False		
IN	Bool	false	Non-retain	True	True	True	False		
Q	Bool	false	Non-retain	True	False	True	False		

Name	Data type	Default value	Retain	Accessible from HMI/OPC UA/Web API	Writable from HMI/OPC UA/Web API	Visible in HMI engineering	Setpoint	Supervision	Comment
Pnp Grab Delay3	TON_TIME		Non-retain	True	True	True	True		
PT	Time	T#1s	Non-retain	True	True	True	False		
ET	Time	T#0ms	Non-retain	True	False	True	False		
IN	Bool	false	Non-retain	True	True	True	False		
Q	Bool	false	Non-retain	True	False	True	False		
Temp									
Constant									

Network 1: Fault

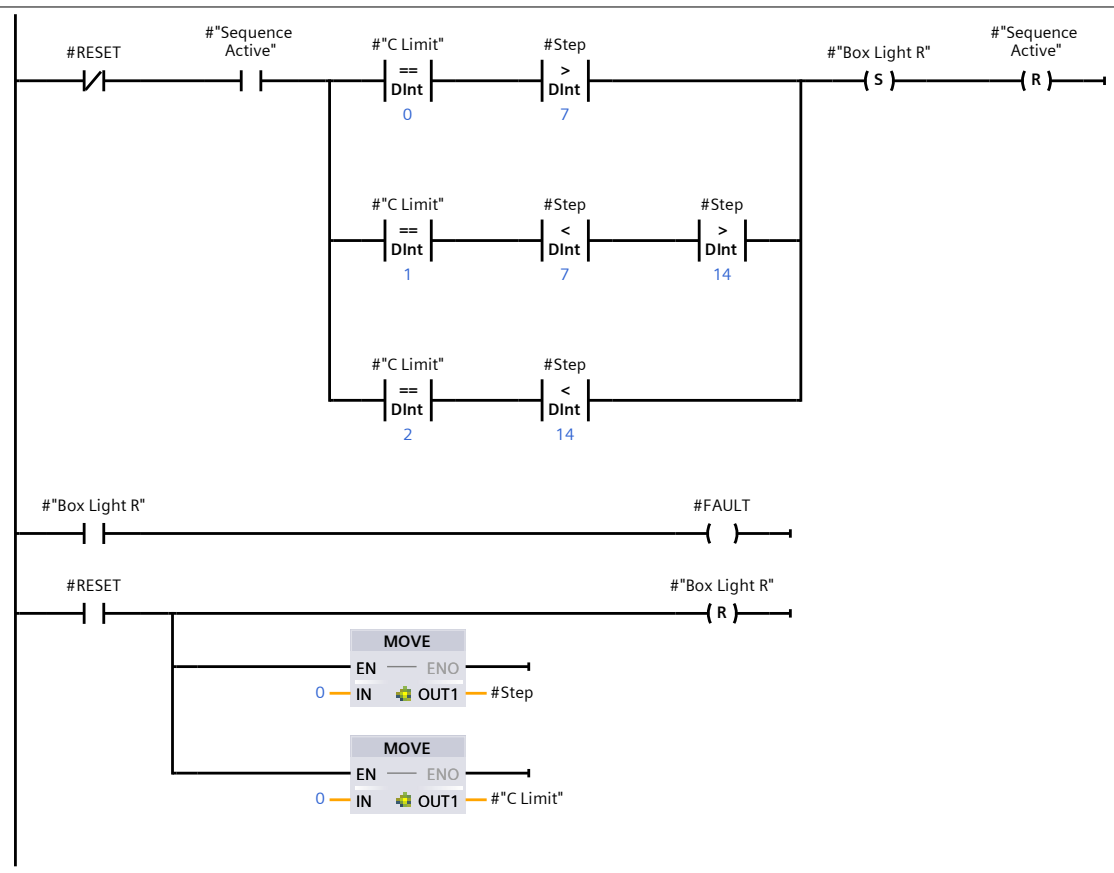

Network 2: Sequence Done

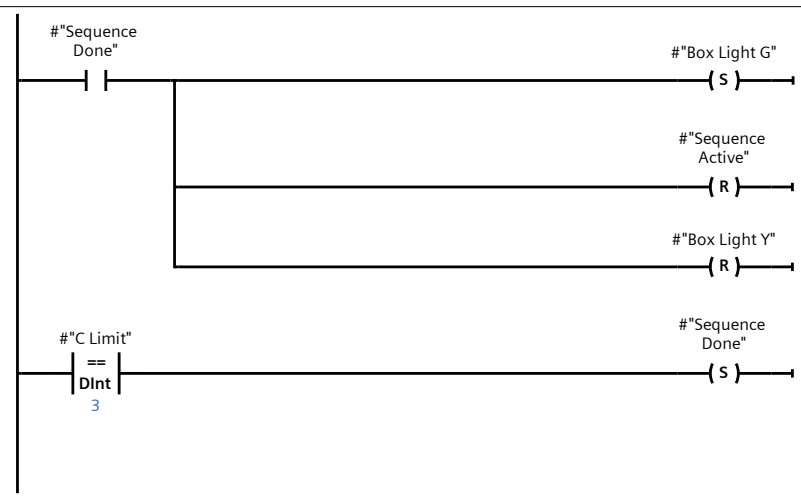

Network 3: Idle(reworked)

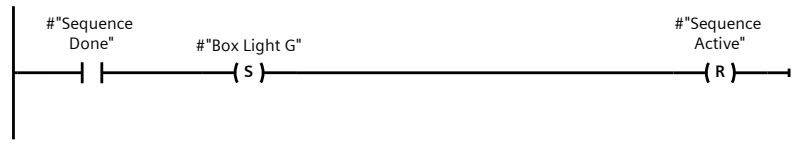

Network 4: Step 0 - Sequence Activiation

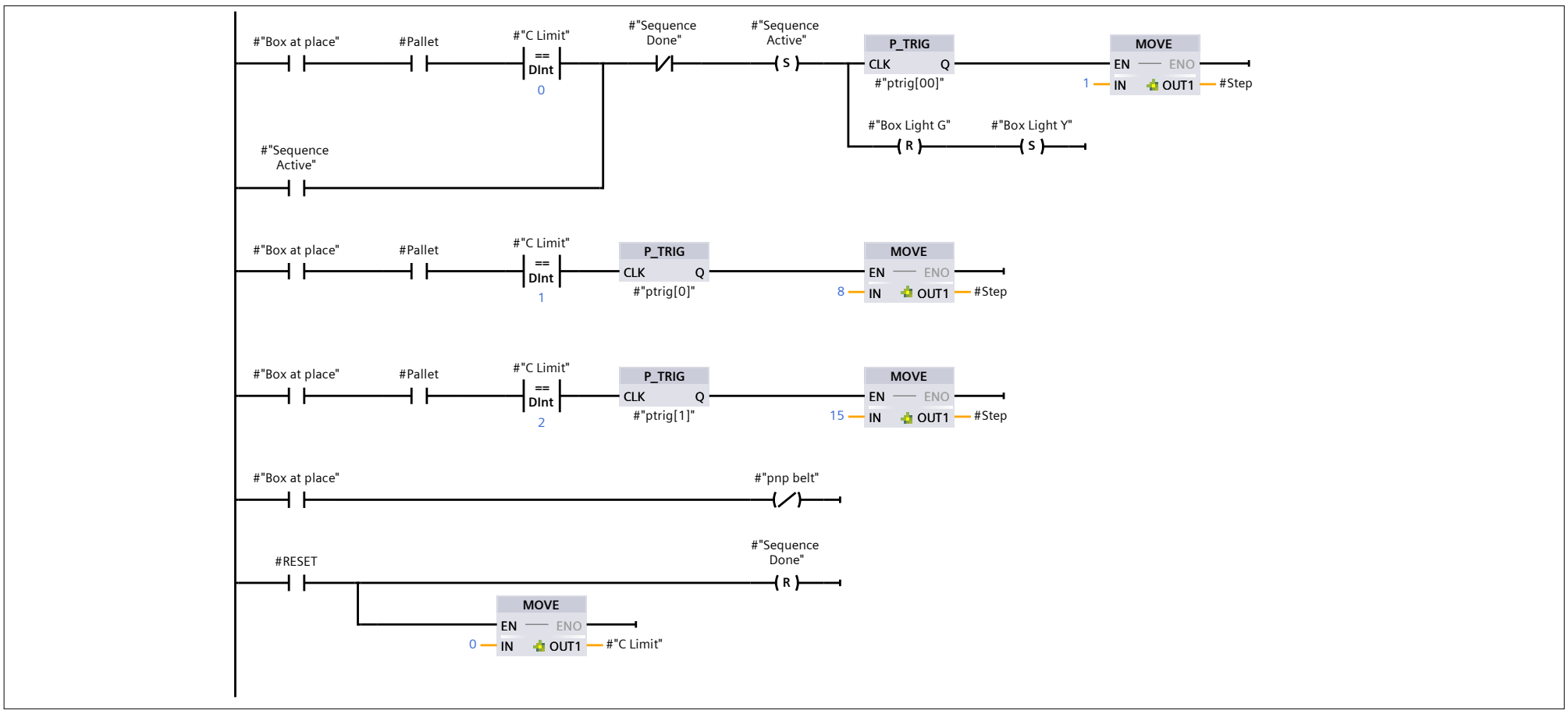

Network 5: Step 1 - Move arm to item position

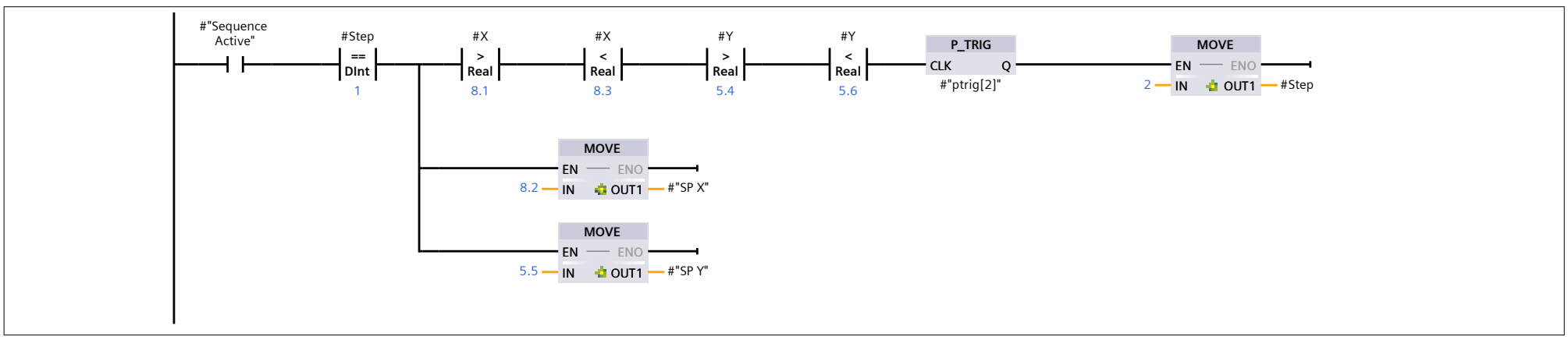

Network 6: Step 2 - Move arm down to item position

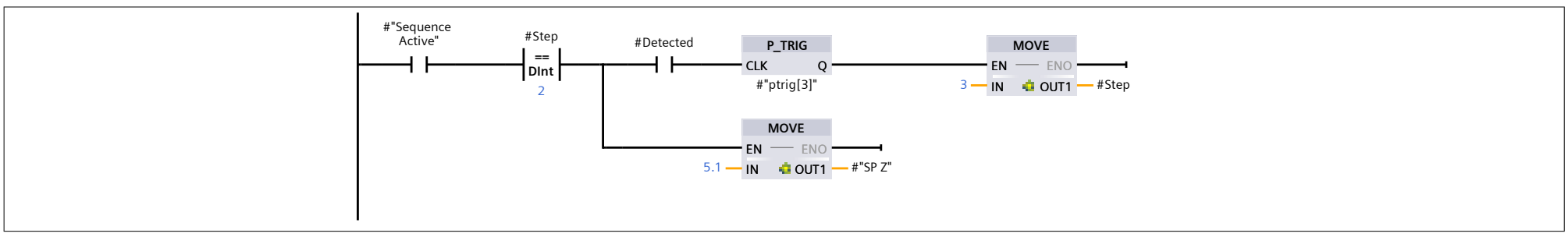

Network 7: Step 3 - Grab item

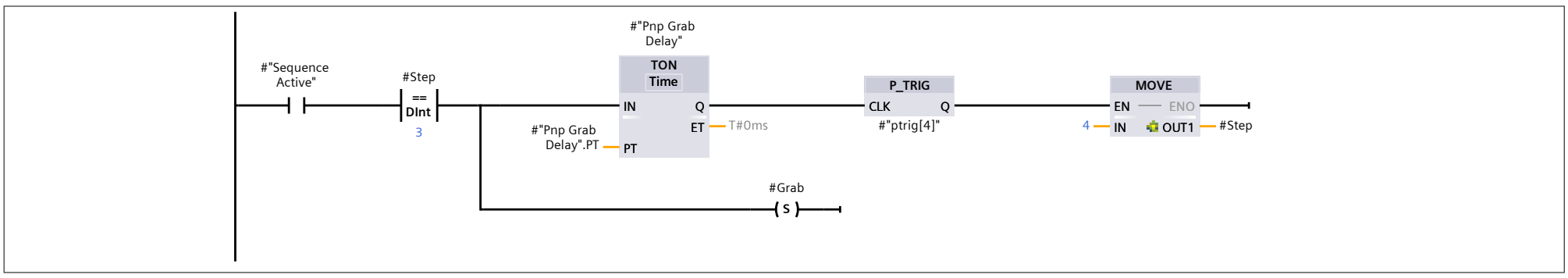

Network 8: Step 4 - Move arm up

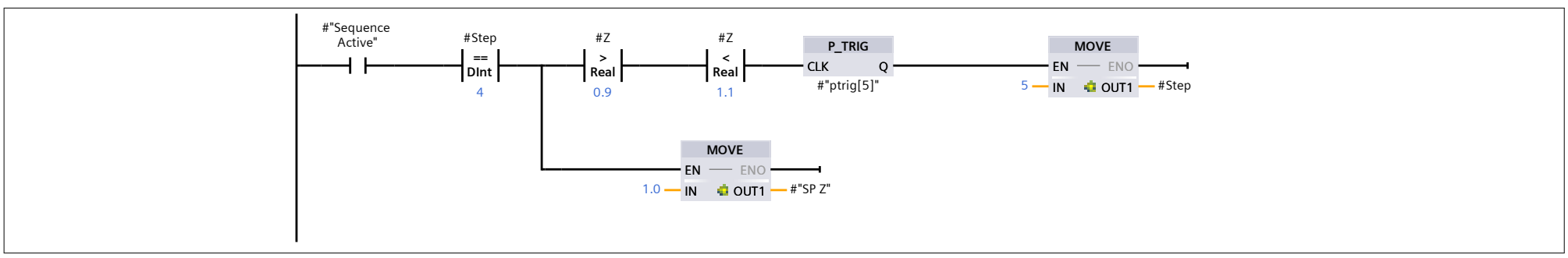

Network 9: Step 5 - Move arm to pallet position 1

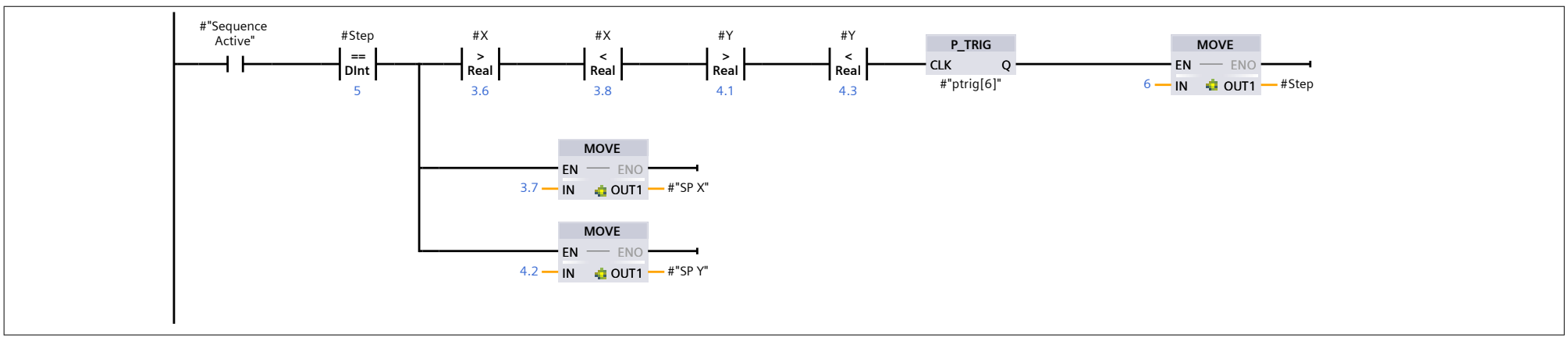

Network 10: Step 6 - Move arm down to pallet position

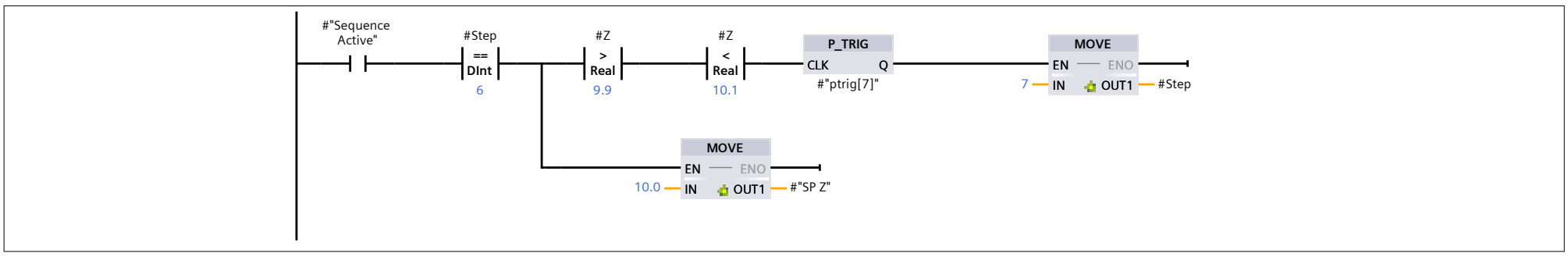

Network 11: Step 7 - Release Grab & Move Arm up

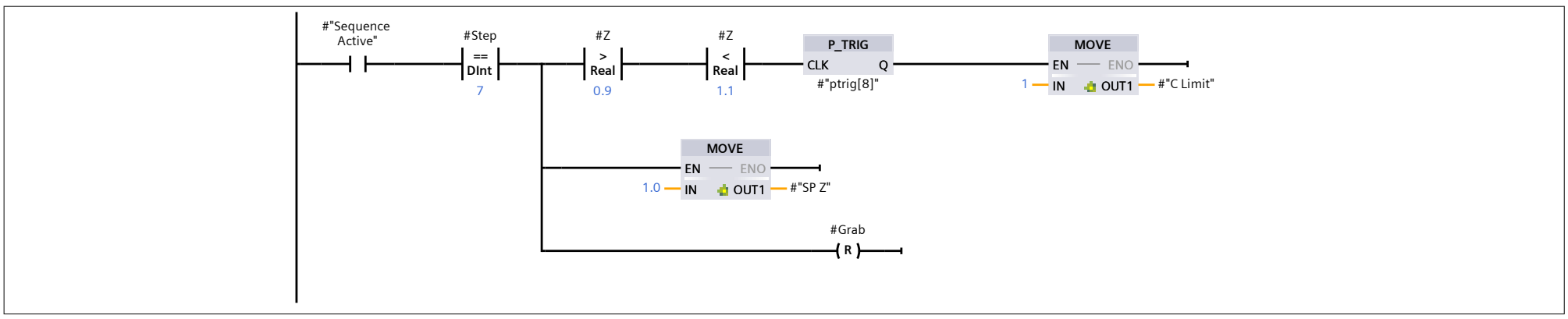

Network 12: Step 8 - Move arm to item position

Repeats step 1-7 (with different XY coordinates)

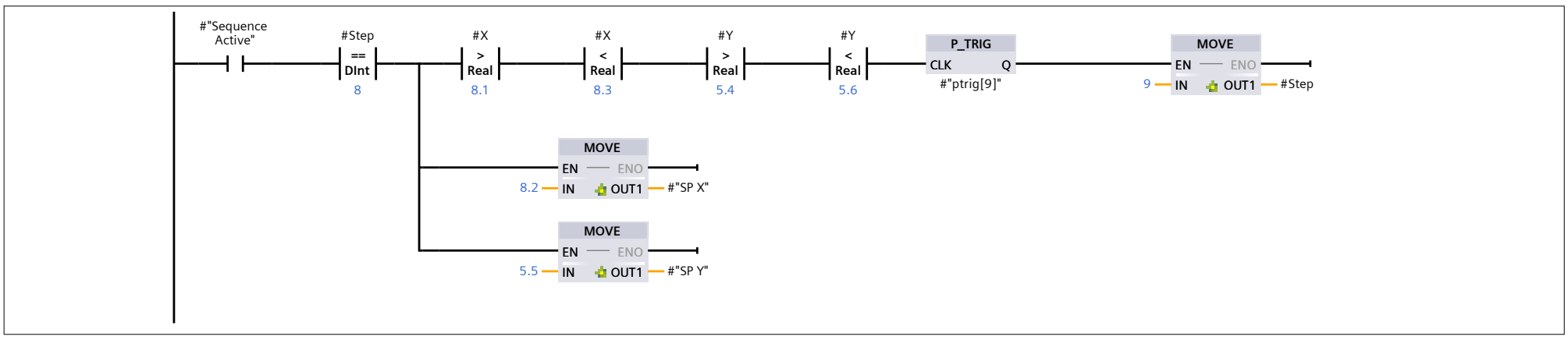

Network 13: Step 9 - Move arm down to item position

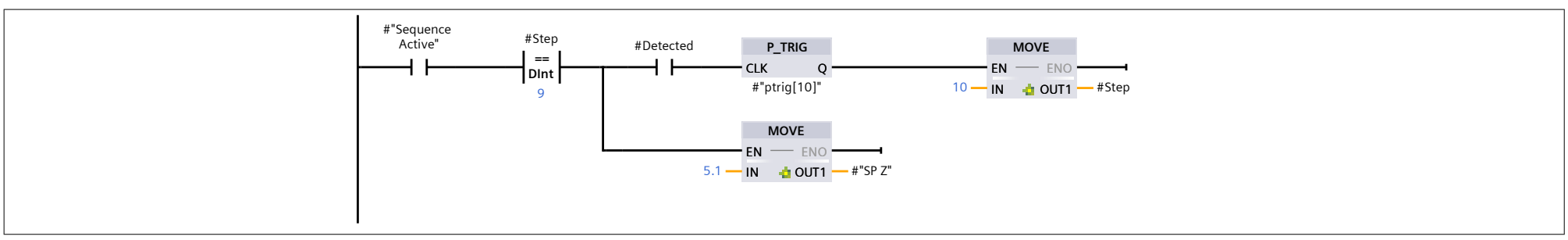

Network 14: Step 10 - Grab item

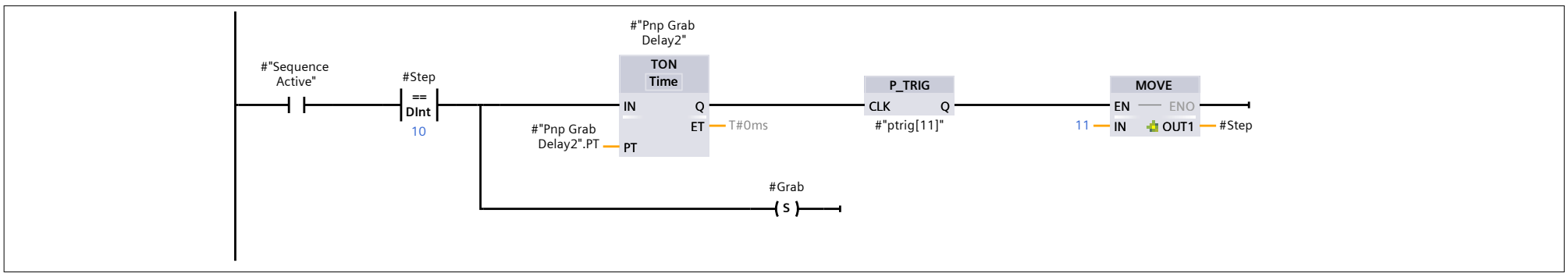

Network 15: Step 11 - Move arm up

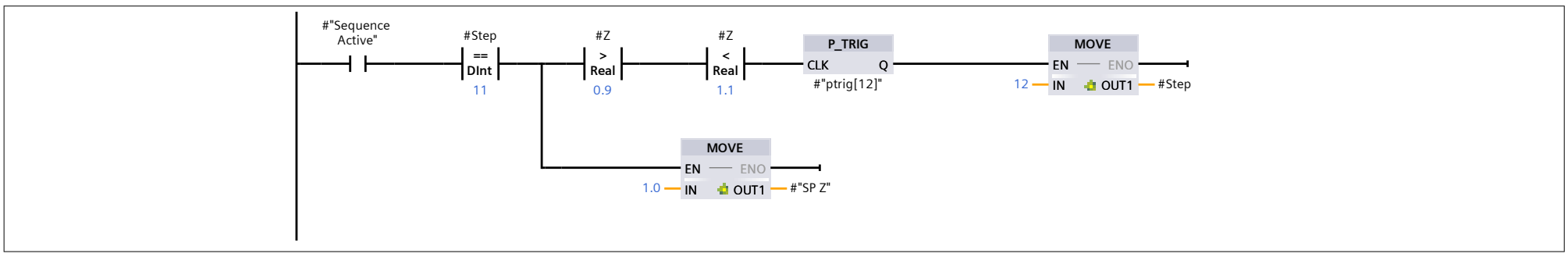

Network 16: Step 12 - Move arm to pallet position 2

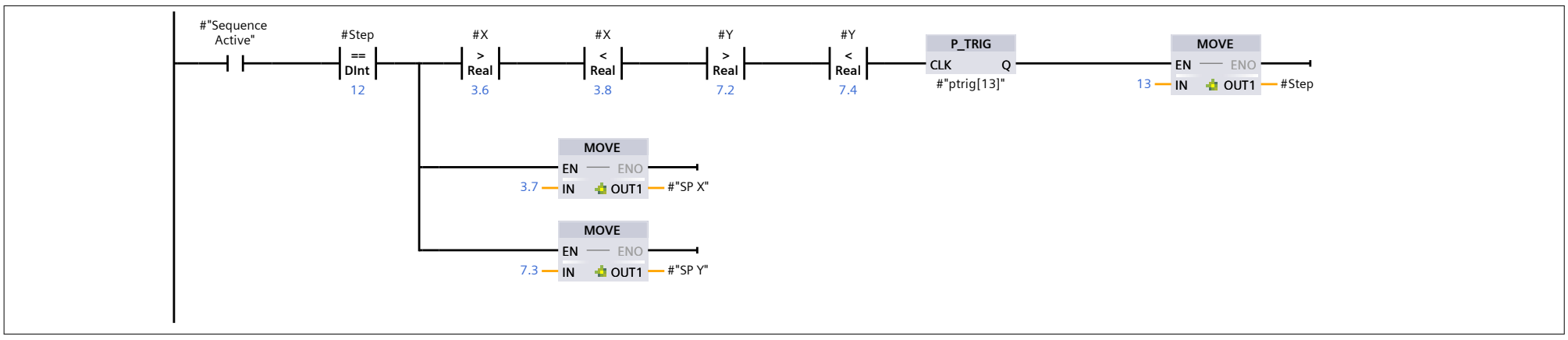

Network 17: Step 13 - Move arm down to pallet position

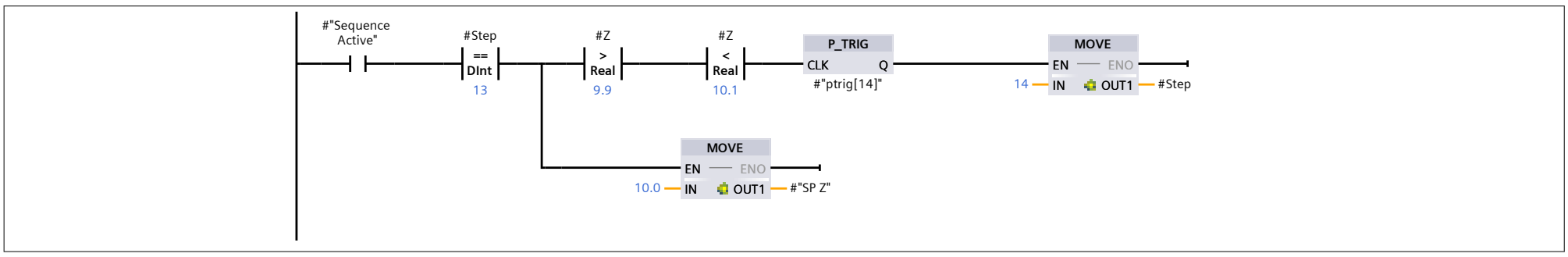

Network 18: Step 14 - Release Grab & Move arm up

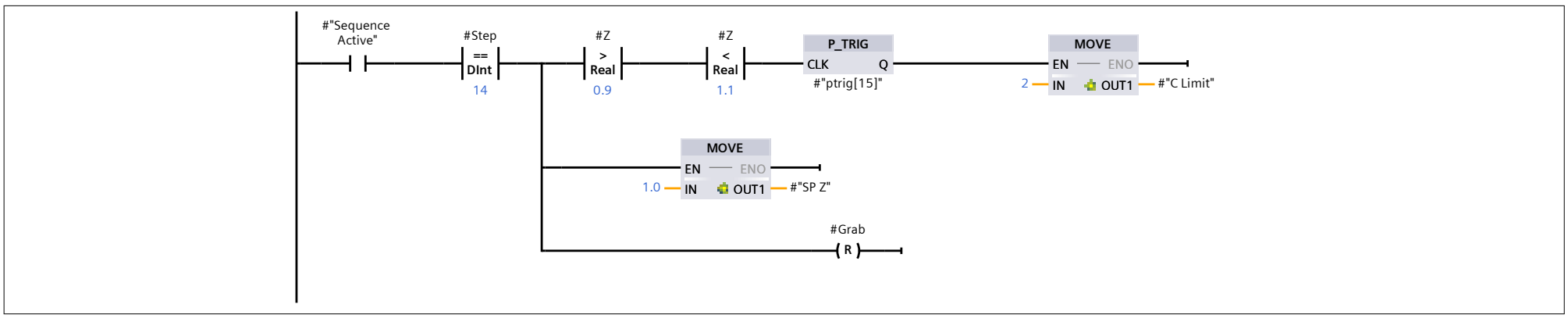

Network 19: Step 15 - Move arm to item position

Repeats step 8-14 (with different XY coordinates)

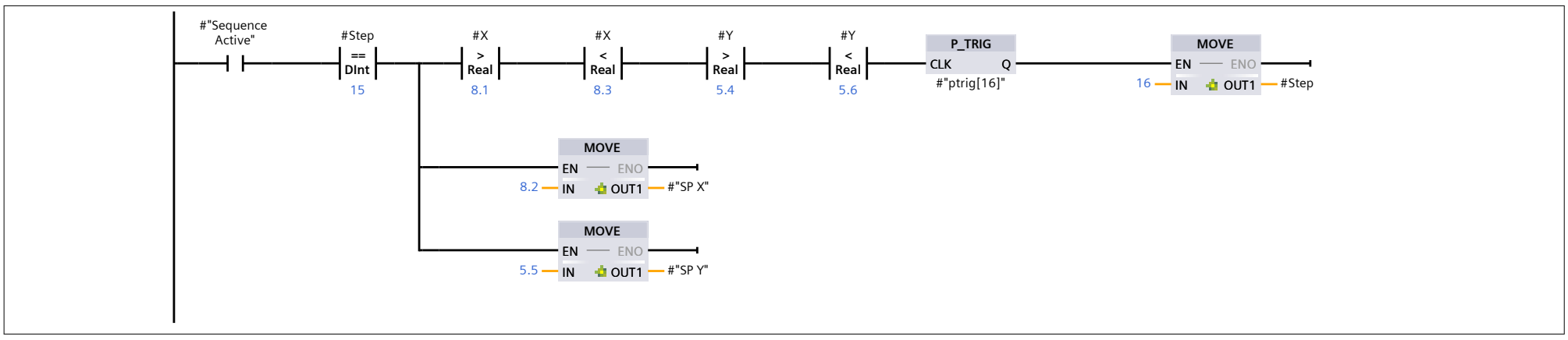

Network 20: Step 16 - Move arm down to item position

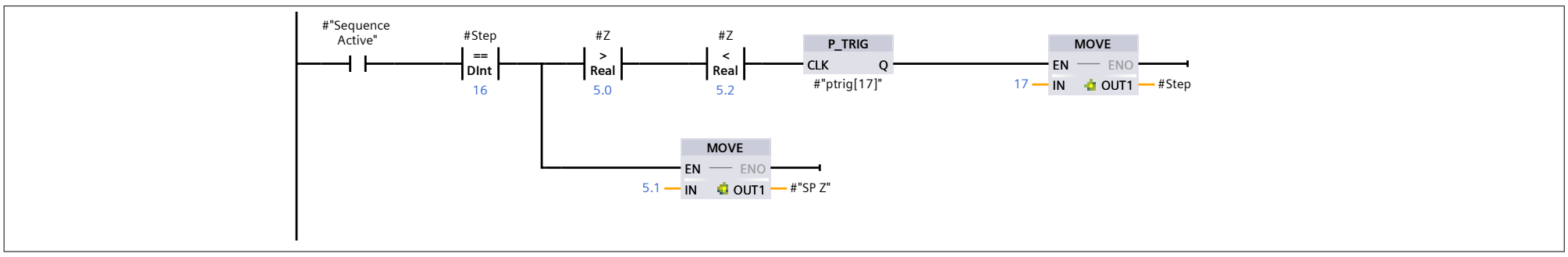

Network 21: Step 17 - Grab item

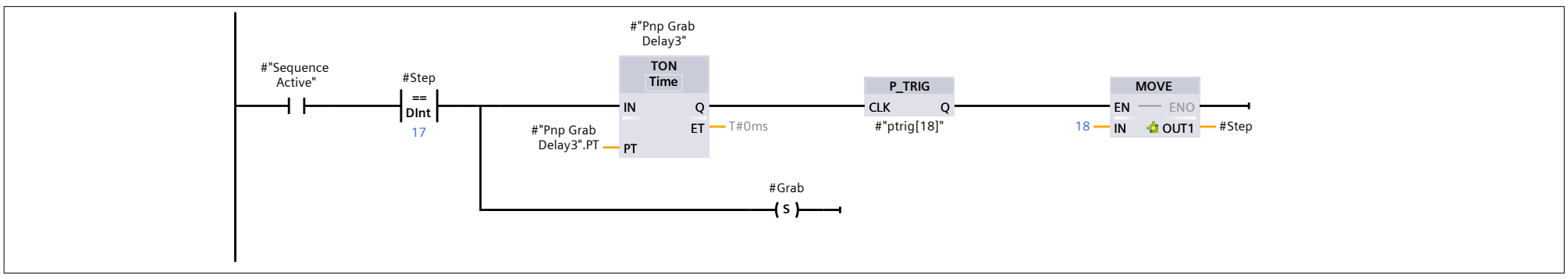

Network 22: Step 18 - Move arm up

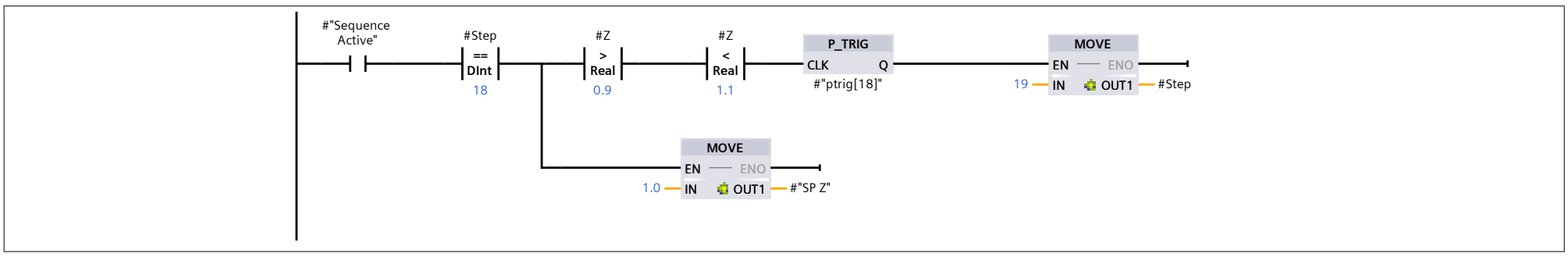

Network 23: Step 19 - Move arm to pallet position 3 (+rotate)

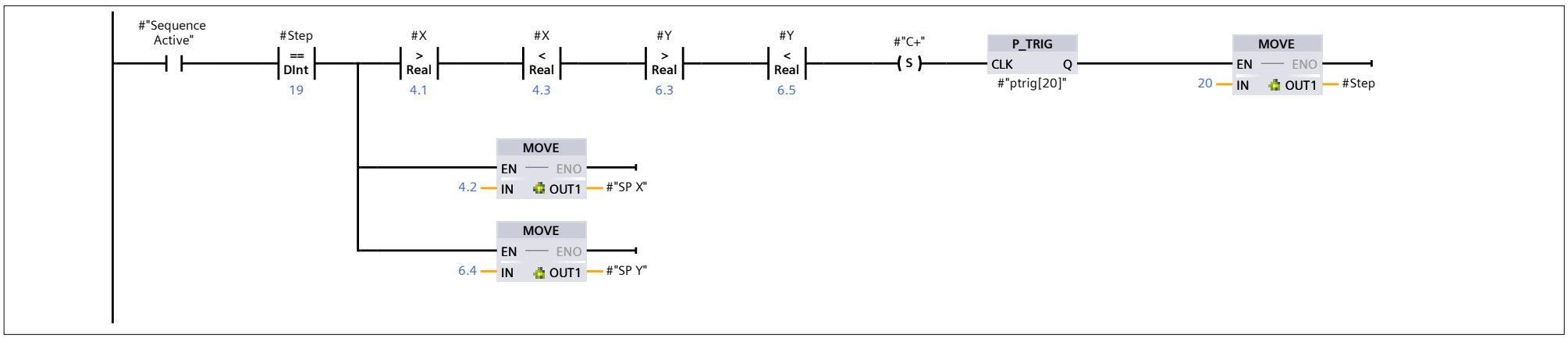

Network 24: Step 20 - Move arm down to pallet position

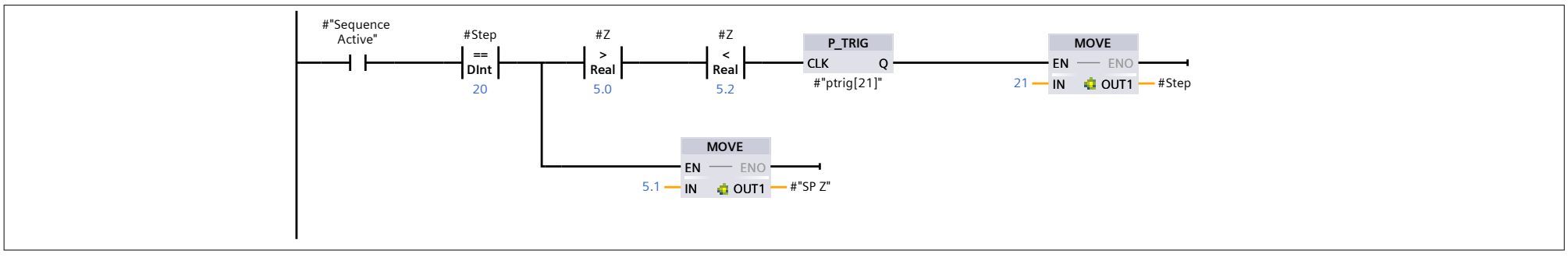

Network 25: Step 21 - Release Grab & Move Arm up

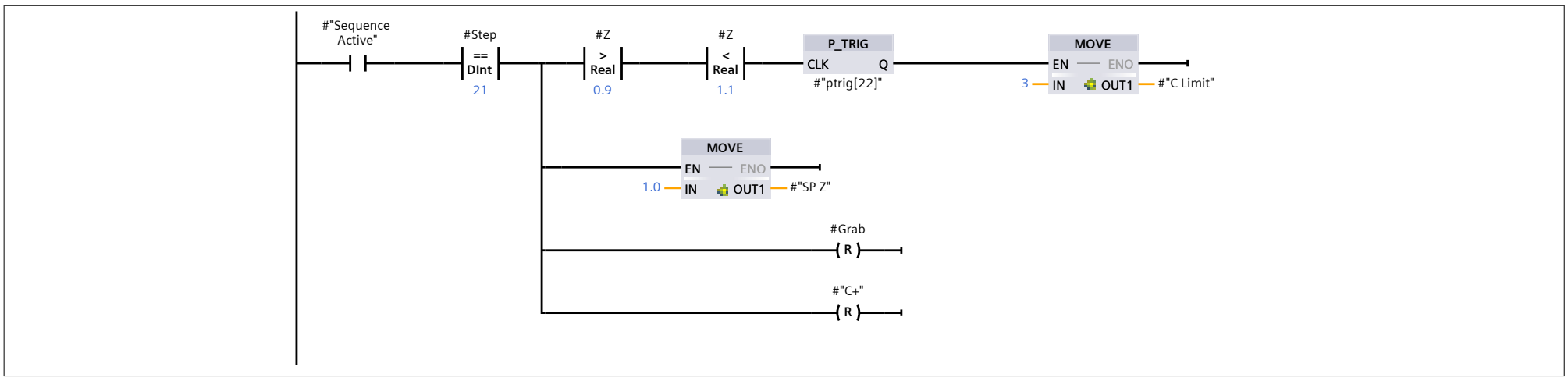

PLC_1 [CPU 1217C DC/DC/DC] / Program blocks

Pick and Place XYZ Alg_DB1 [DB10]

Pick and Place XYZ Alg_DB1 Properties							
General							
Name	Pick and Place XYZ Alg_DB1	**Number**	10	**Type**	DB	**Language**	DB
Numbering	Automatic						
Information							
Title		**Author**		**Comment**		**Family**	
Version	0.1	**User-defined ID**					

Name	Data type	Start value	Retain	Accessible from HMI/OPC UA/Web API	Writable from HMI/OPC UA/Web API	Visible in HMI engineering	Setpoint	Supervision	Comment
Input									
Pallet	Bool	false	False	True	True	True	False		
Box at place	Bool	false	False	True	True	True	False		
X	Real	0.0	False	True	True	True	False		
Y	Real	0.0	False	True	True	True	False		
Z	Real	0.0	False	True	True	True	False		
RESET	Bool	false	False	True	True	True	False		
Detected	Bool	false	False	True	True	True	False		
Output									
SP X	Real	0.0	True	True	True	True	False		
SP Y	Real	0.0	True	True	True	True	False		
SP Z	Real	0.0	True	True	True	True	False		
C+	Bool	false	False	True	True	True	False		
Grab	Bool	false	False	True	True	True	False		
Box Light R	Bool	false	False	True	True	True	False		
Box Light Y	Bool	false	False	True	True	True	False		
Box Light G	Bool	false	False	True	True	True	False		
pnp belt	Bool	false	False	True	True	True	False		
Sequence Done	Bool	false	False	True	True	True	False		
InOut									
Static									
C Limit	DInt	0	False	True	True	True	False		
FAULT	Bool	false	False	True	True	True	False		
Step	DInt	0	False	True	True	True	False		
Sequence Active	Bool	false	False	True	True	True	False		
ptrig[00]	Bool	false	False	False	False	False	False		
ptrig[0]	Bool	false	False	False	False	False	False		
ptrig[1]	Bool	false	False	False	False	False	False		
ptrig[2]	Bool	false	False	False	False	False	False		
ptrig[3]	Bool	false	False	False	False	False	False		
ptrig[4]	Bool	false	False	False	False	False	False		
ptrig[5]	Bool	false	False	False	False	False	False		
ptrig[6]	Bool	false	False	False	False	False	False		
ptrig[7]	Bool	false	False	False	False	False	False		
ptrig[8]	Bool	false	False	False	False	False	False		
ptrig[9]	Bool	false	False	False	False	False	False		
ptrig[10]	Bool	false	False	False	False	False	False		
ptrig[11]	Bool	false	False	False	False	False	False		
ptrig[12]	Bool	false	False	False	False	False	False		
ptrig[13]	Bool	false	False	False	False	False	False		
ptrig[14]	Bool	false	False	False	False	False	False		
ptrig[15]	Bool	false	False	False	False	False	False		
ptrig[16]	Bool	false	False	False	False	False	False		
ptrig[17]	Bool	false	False	False	False	False	False		
ptrig[18]	Bool	false	False	True	True	True	False		
ptrig[19]	Bool	false	False	True	True	True	False		
ptrig[20]	Bool	false	False	True	True	True	False		
ptrig[21]	Bool	false	False	True	True	True	False		
ptrig[22]	Bool	false	False	True	True	True	False		
Pnp Grab Delay	TON_TIME		False	True	True	True	True		
PT	Time	T#1s	False	True	True	True	False		
ET	Time	T#0ms	False	True	False	True	False		
IN	Bool	false	False	True	True	True	False		
Q	Bool	false	False	True	False	True	False		
Pnp Grab Delay2	TON_TIME		False	True	True	True	True		
PT	Time	T#1s	False	True	True	True	False		
ET	Time	T#0ms	False	True	False	True	False		
IN	Bool	false	False	True	True	True	False		
Q	Bool	false	False	True	False	True	False		

Name	Data type	Start value	Retain	Accessible from HMI/OPC UA/Web API	Writable from HMI/OPC UA/Web API	Visible in HMI engineering	Setpoint	Supervision	Comment
Pnp Grab Delay3	TON_TIME		False	True	True	True	True		
PT	Time	T#1s	False	True	True	True	False		
ET	Time	T#0ms	False	True	False	True	False		
IN	Bool	false	False	True	True	True	False		
Q	Bool	false	False	True	False	True	False		

PLC_1 [CPU 1217C DC/DC/DC] / Program blocks

Pick and Place XYZ Alg(small pallet) [FB2]

Pick and Place XYZ Alg(small pallet) Properties							
General							
Name	Pick and Place XYZ Alg(small pallet)	**Number**	2	**Type**	FB	**Language**	LAD
Numbering	Automatic						
Information							
Title		**Author**		**Comment**		**Family**	
Version	0.1	**User-defined ID**					

Name	Data type	Default value	Retain	Accessible from HMI/OPC UA/Web API	Writable from HMI/OPC UA/Web API	Visible in HMI engineering	Setpoint	Supervision	Comment
Input									
Pallet	Bool	false	Non-retain	True	True	True	False		
Box at place	Bool	false	Non-retain	True	True	True	False		
X	Real	0.0	Non-retain	True	True	True	False		
Y	Real	0.0	Non-retain	True	True	True	False		
Z	Real	0.0	Non-retain	True	True	True	False		
RESET	Bool	false	Non-retain	True	True	True	False		
Detected	Bool	false	Non-retain	True	True	True	False		
Output									
SP X	Real	0.0	Non-retain	True	True	True	False		
SP Y	Real	0.0	Non-retain	True	True	True	False		
SP Z	Real	0.0	Non-retain	True	True	True	False		
C+	Bool	false	Non-retain	True	True	True	False		
Grab	Bool	false	Non-retain	True	True	True	False		
Box Light R	Bool	false	Non-retain	True	True	True	False		
Box Light Y	Bool	false	Non-retain	True	True	True	False		
Box Light G	Bool	false	Non-retain	True	True	True	False		
pnp belt	Bool	false	Non-retain	True	True	True	False		
Sequence Done	Bool	false	Non-retain	True	True	True	False		
InOut									
Static									
C Limit	DInt	0	Non-retain	True	True	True	False		
FAULT	Bool	false	Non-retain	True	True	True	False		
Step	DInt	0	Non-retain	True	True	True	False		
Sequence Active	Bool	false	Non-retain	True	True	True	False		
ptrig[00]	Bool	false	Non-retain	True	True	True	False		
ptrig[0]	Bool	false	Non-retain	True	True	True	False		
ptrig[1]	Bool	false	Non-retain	True	True	True	False		
ptrig[1.1]	Bool	false	Non-retain	True	True	True	False		
ptrig[1.2]	Bool	false	Non-retain	True	True	True	False		
ptrig[2]	Bool	false	Non-retain	True	True	True	False		
ptrig[3]	Bool	false	Non-retain	True	True	True	False		
ptrig[4]	Bool	false	Non-retain	True	True	True	False		
ptrig[5]	Bool	false	Non-retain	True	True	True	False		
ptrig[6]	Bool	false	Non-retain	True	True	True	False		
ptrig[7]	Bool	false	Non-retain	True	True	True	False		
ptrig[8]	Bool	false	Non-retain	True	True	True	False		
ptrig[9]	Bool	false	Non-retain	True	True	True	False		
ptrig[10]	Bool	false	Non-retain	True	True	True	False		
ptrig[11]	Bool	false	Non-retain	True	True	True	False		
ptrig[12]	Bool	false	Non-retain	True	True	True	False		
ptrig[13]	Bool	false	Non-retain	True	True	True	False		
ptrig[14]	Bool	false	Non-retain	True	True	True	False		
ptrig[15]	Bool	false	Non-retain	True	True	True	False		
ptrig[16]	Bool	false	Non-retain	True	True	True	False		
ptrig[17]	Bool	false	Non-retain	True	True	True	False		
ptrig[18]	Bool	false	Non-retain	True	True	True	False		
ptrig[19]	Bool	false	Non-retain	True	True	True	False		
ptrig[20]	Bool	false	Non-retain	True	True	True	False		
ptrig[21]	Bool	false	Non-retain	True	True	True	False		
ptrig[22]	Bool	false	Non-retain	True	True	True	False		
ptrig[23]	Bool	false	Non-retain	True	True	True	False		
ptrig[24]	Bool	false	Non-retain	True	True	True	False		
ptrig[25]	Bool	false	Non-retain	True	True	True	False		
ptrig[26]	Bool	false	Non-retain	True	True	True	False		
ptrig[27]	Bool	false	Non-retain	True	True	True	False		
ptrig[28]	Bool	false	Non-retain	True	True	True	False		
ptrig[29]	Bool	false	Non-retain	True	True	True	False		
ptrig[30]	Bool	false	Non-retain	True	True	True	False		

Name	Data type	Default value	Retain	Accessible from HMI/OPC UA/Web API	Writable from HMI/OPC UA/Web API	Visible in HMI engineering	Setpoint	Supervision	Comment
ptrig[31]	Bool	false	Non-retain	True	True	True	False		
ptrig[32]	Bool	false	Non-retain	True	True	True	False		
ptrig[33]	Bool	false	Non-retain	True	True	True	False		
ptrig[34]	Bool	false	Non-retain	True	True	True	False		
ptrig[35]	Bool	false	Non-retain	True	True	True	False		
ptrig[36]	Bool	false	Non-retain	True	True	True	False		
Pnp Grab Delay	TON_TIME		Non-retain	True	True	True	False		
PT	Time	T#1s	Non-retain	True	True	True	False		
ET	Time	T#0ms	Non-retain	True	False	True	False		
IN	Bool	false	Non-retain	True	True	True	False		
Q	Bool	false	Non-retain	True	False	True	False		
Pnp Grab Delay2	TON_TIME		Non-retain	True	True	True	False		
PT	Time	T#1s	Non-retain	True	True	True	False		
ET	Time	T#0ms	Non-retain	True	False	True	False		
IN	Bool	false	Non-retain	True	True	True	False		
Q	Bool	false	Non-retain	True	False	True	False		
Pnp Grab Delay3	TON_TIME		Non-retain	True	True	True	False		
PT	Time	T#1s	Non-retain	True	True	True	False		
ET	Time	T#0ms	Non-retain	True	False	True	False		
IN	Bool	false	Non-retain	True	True	True	False		
Q	Bool	false	Non-retain	True	False	True	False		
Pnp Grab Delay4	TON_TIME		Non-retain	True	True	True	False		
PT	Time	T#1s	Non-retain	True	True	True	False		
ET	Time	T#0ms	Non-retain	True	False	True	False		
IN	Bool	false	Non-retain	True	True	True	False		
Q	Bool	false	Non-retain	True	False	True	False		
Pnp Grab Delay5	TON_TIME		Non-retain	True	True	True	False		
PT	Time	T#1s	Non-retain	True	True	True	False		
ET	Time	T#0ms	Non-retain	True	False	True	False		
IN	Bool	false	Non-retain	True	True	True	False		
Q	Bool	false	Non-retain	True	False	True	False		
Temp									
Constant									

Network 1: Fault

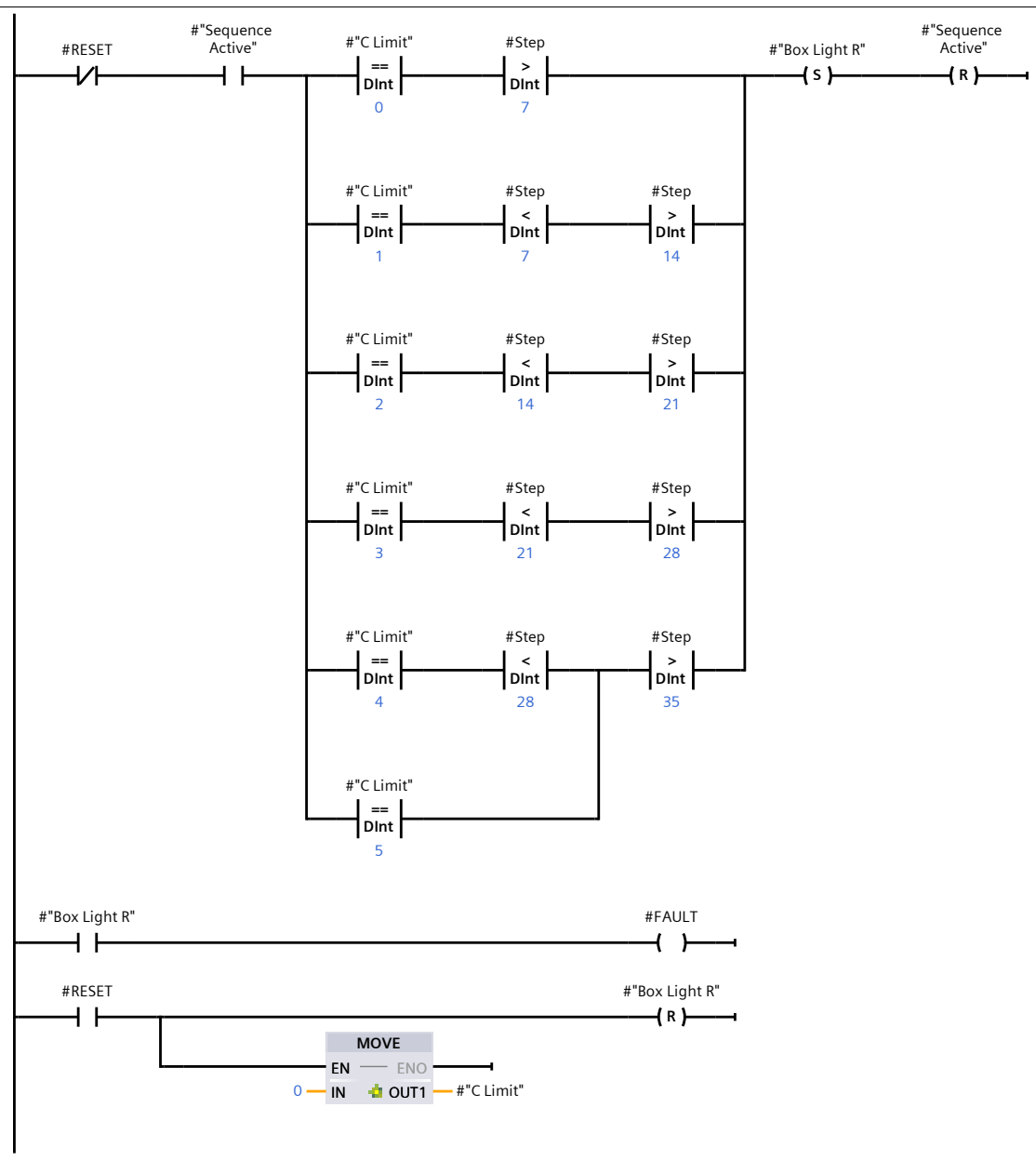

Network 2: Sequence done

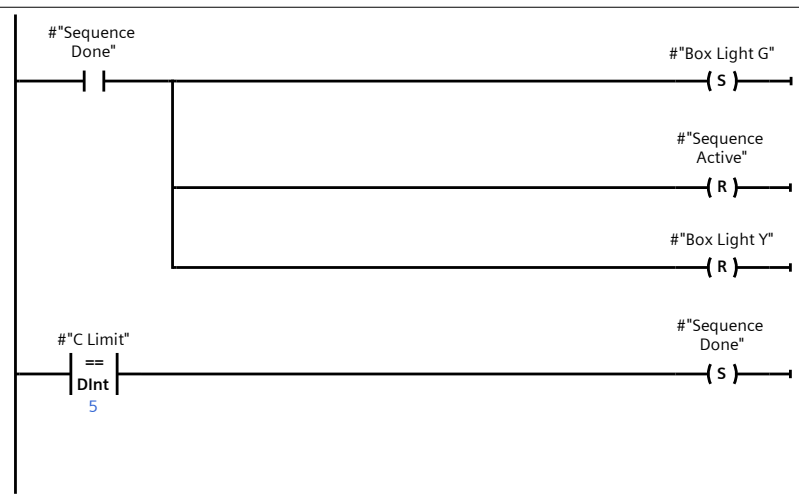

Network 3: Idle(reworked)

Network 4: Step 0 - Sequence Activiation

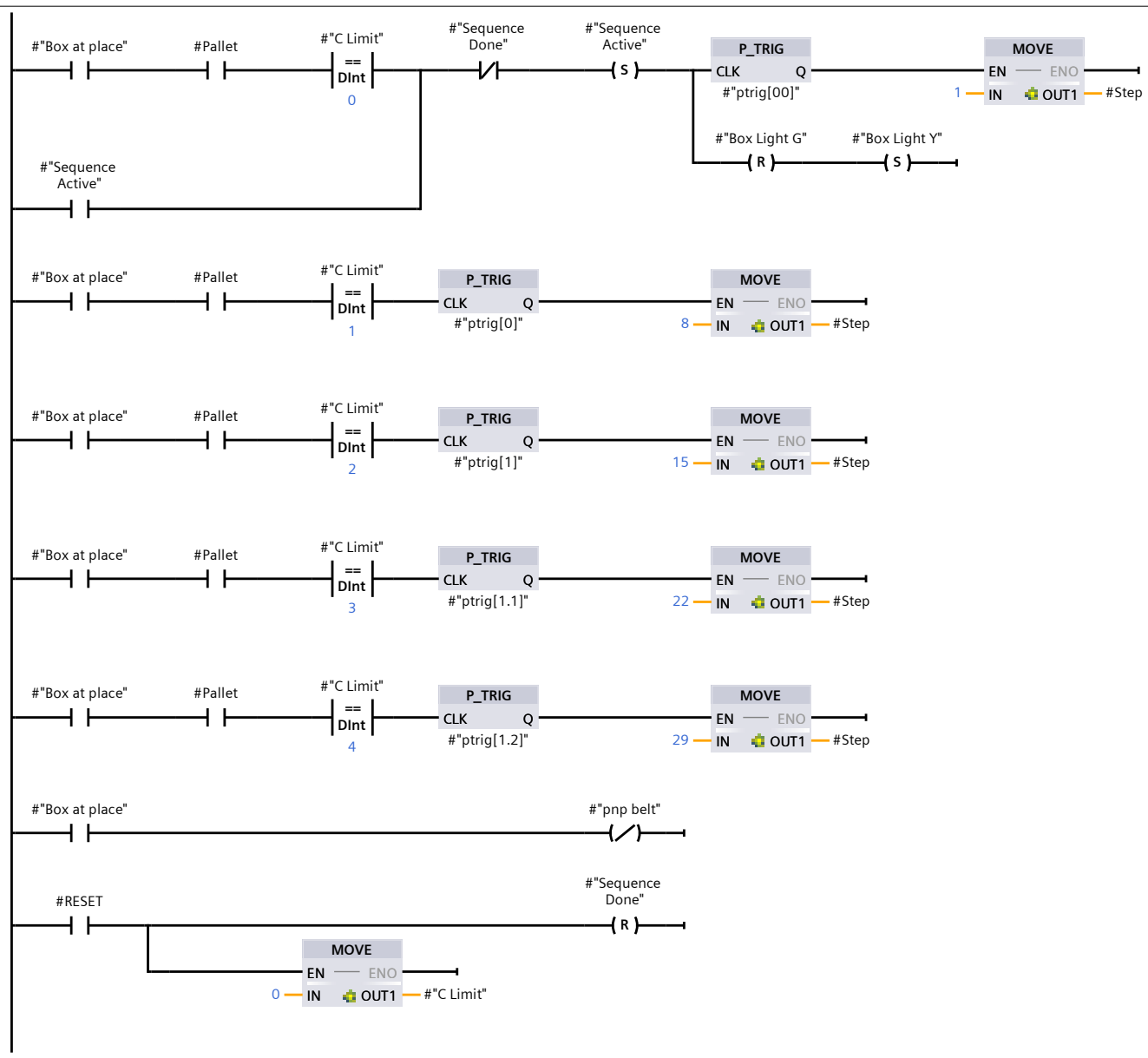

Network 5: Step 1 - Move arm to item position

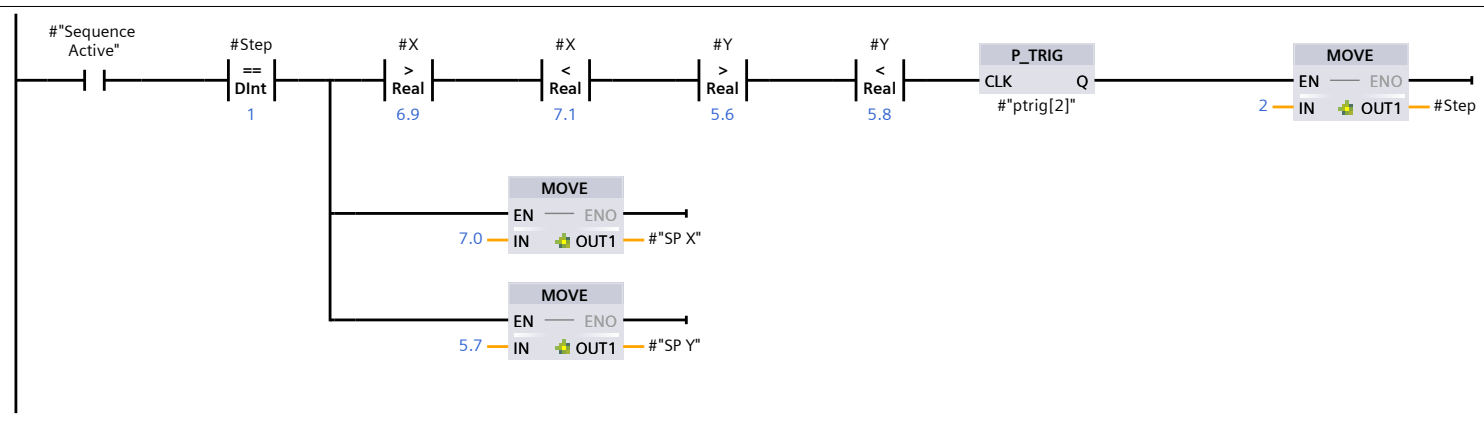

Network 6: Step 2 - Move arm down to item position

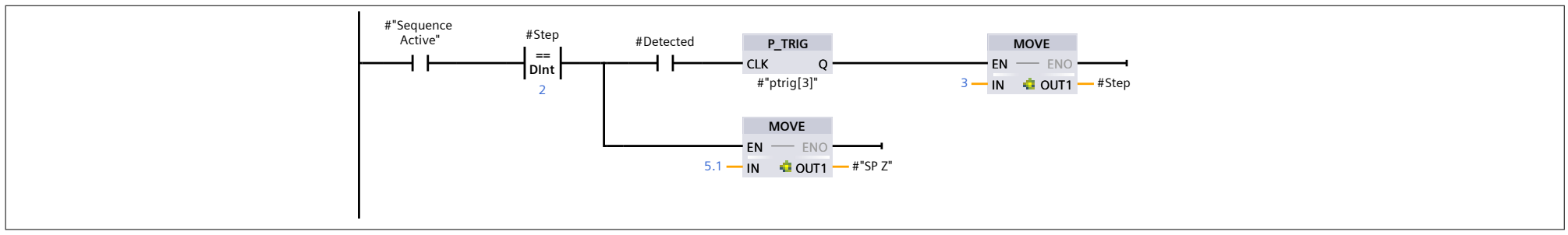

Network 7: Step 3 - Grab item

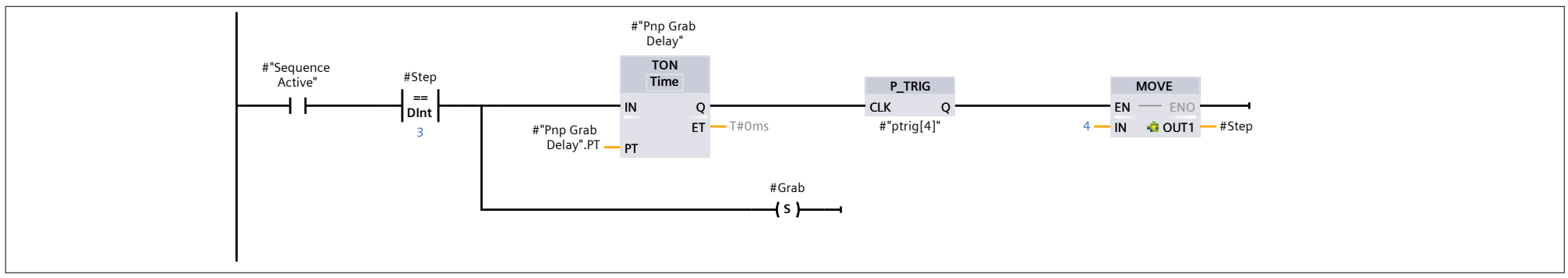

Network 8: Step 4 - Move arm up

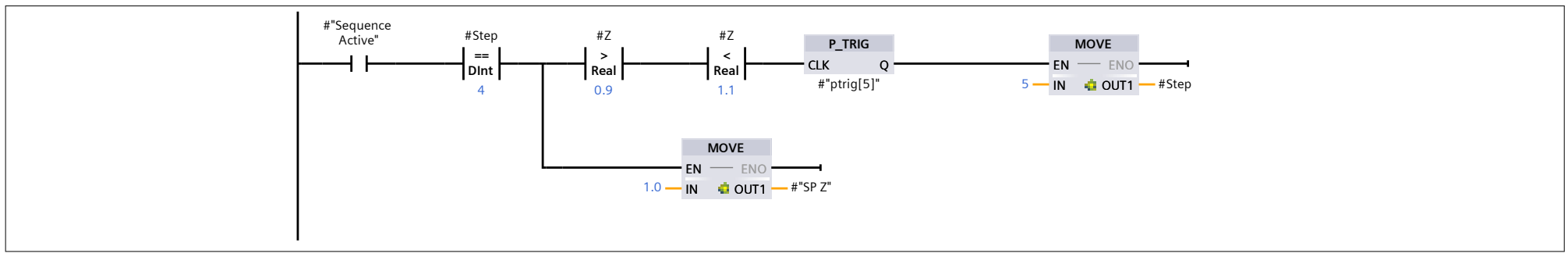

Network 9: Step 5 - Move arm to pallet position 1

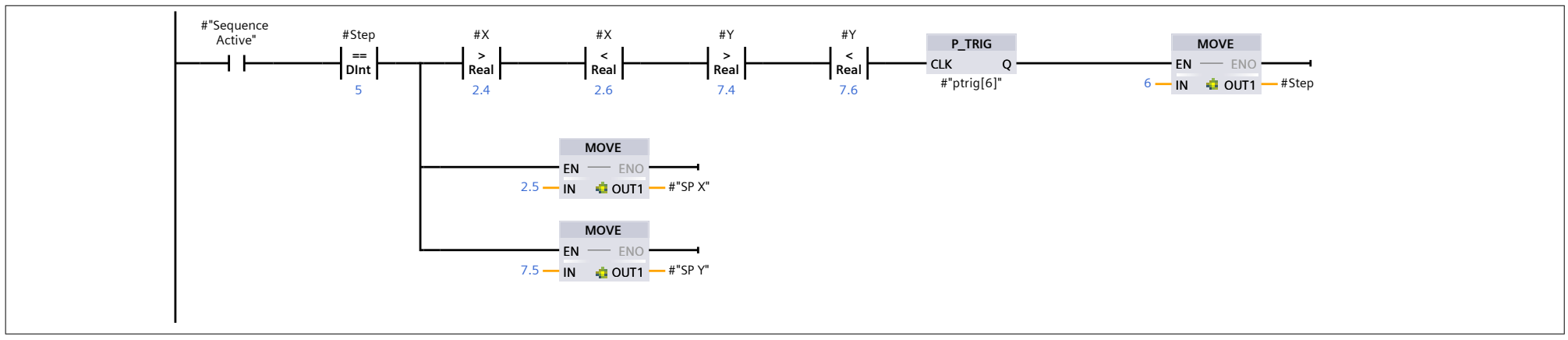

Network 10: Step 6 - Move arm down to pallet position

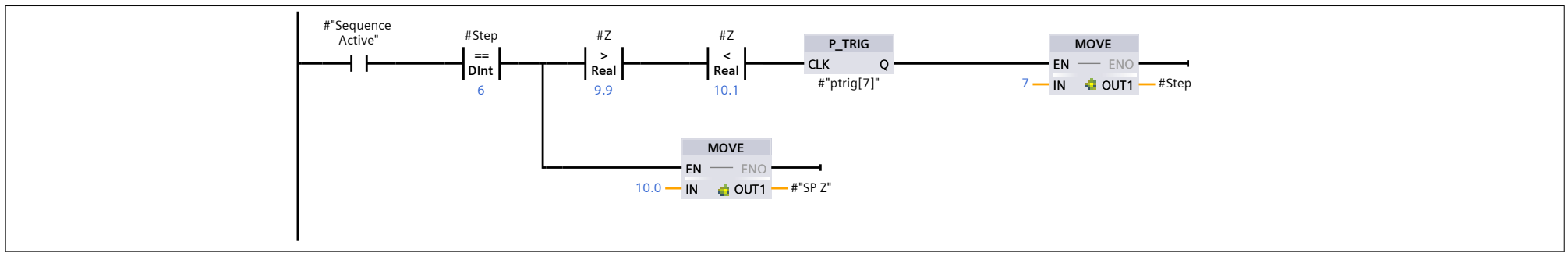

Network 11: Step 7 - Release Grab & Move Arm up

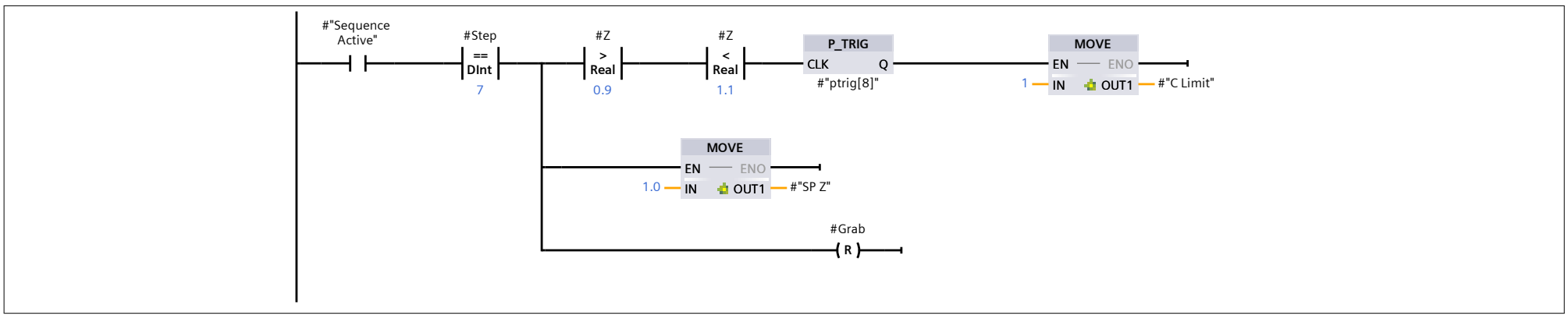

Network 12: Step 8 - Move arm to item position

Repeats step 1-7 (with different XY coordinates)

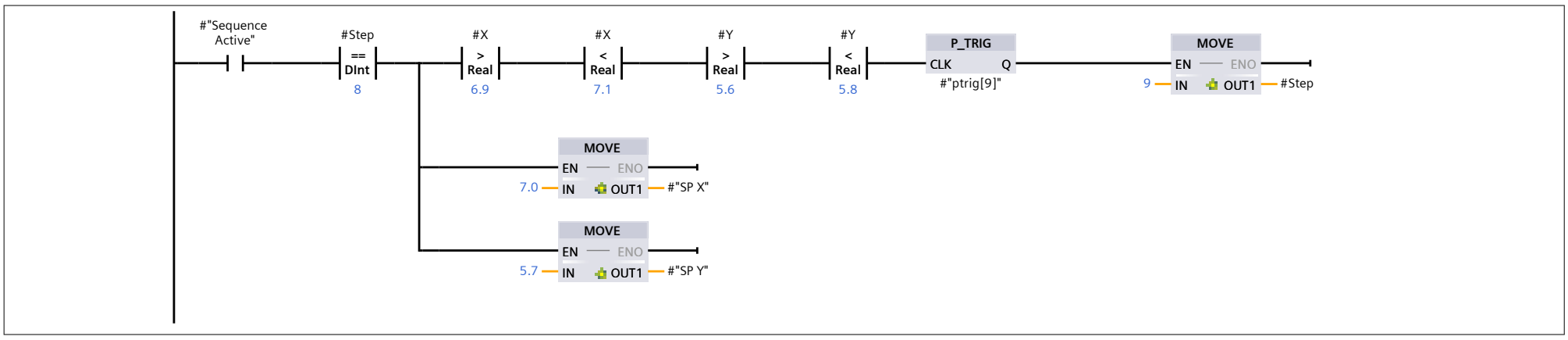

Network 13: Step 9 - Move arm down to item position

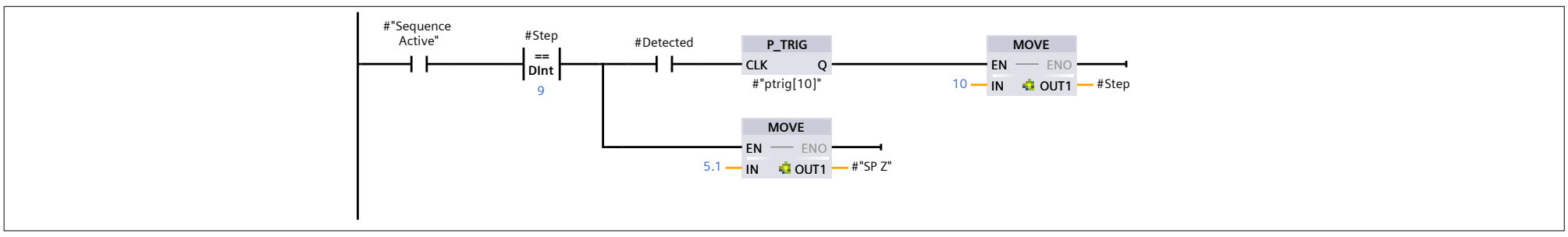

Network 14: Step 10 - Grab item

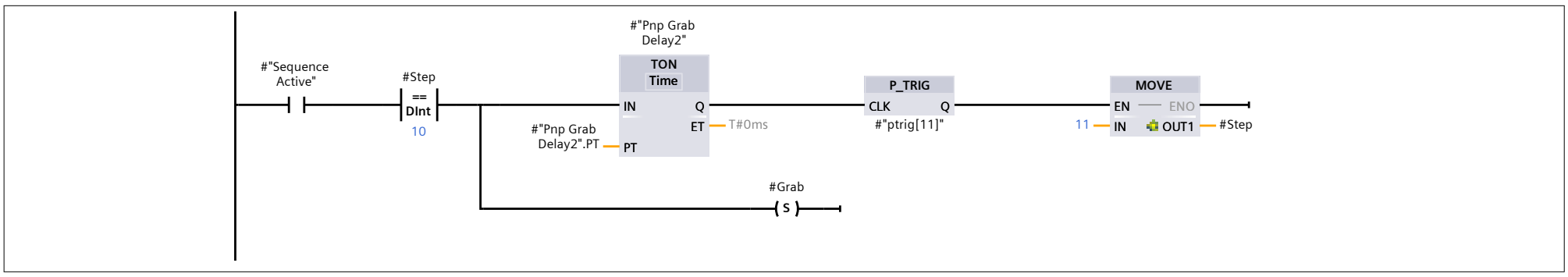

Network 15: Step 11 - Move arm up

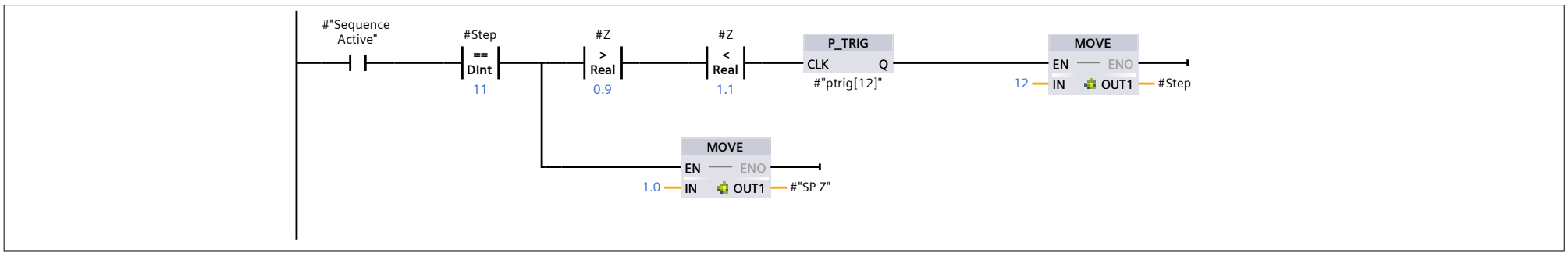

Network 16: Step 12 - Move arm to pallet position 2

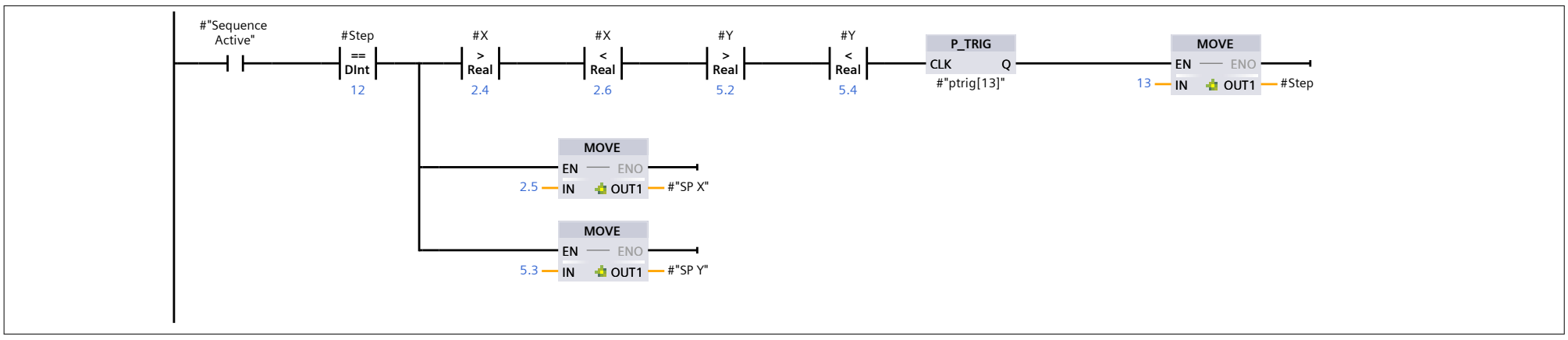

Network 17: Step 13 - Move arm down to pallet position

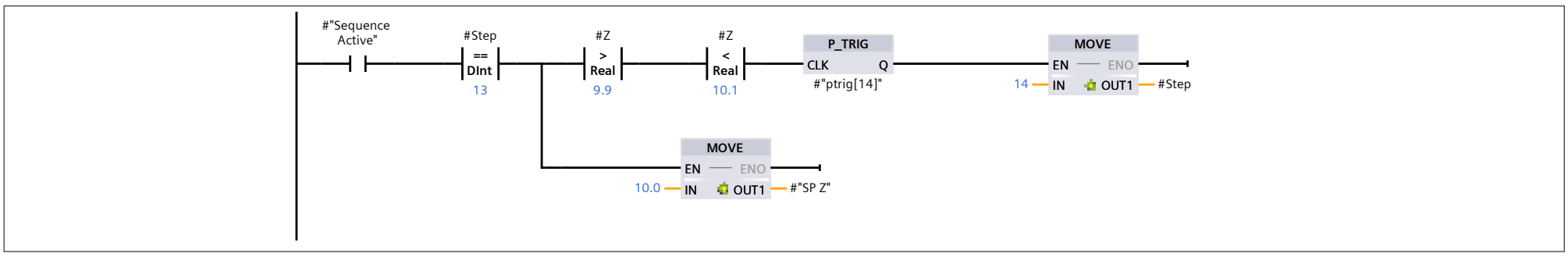

Network 18: Step 14 - Release Grab & Move arm up

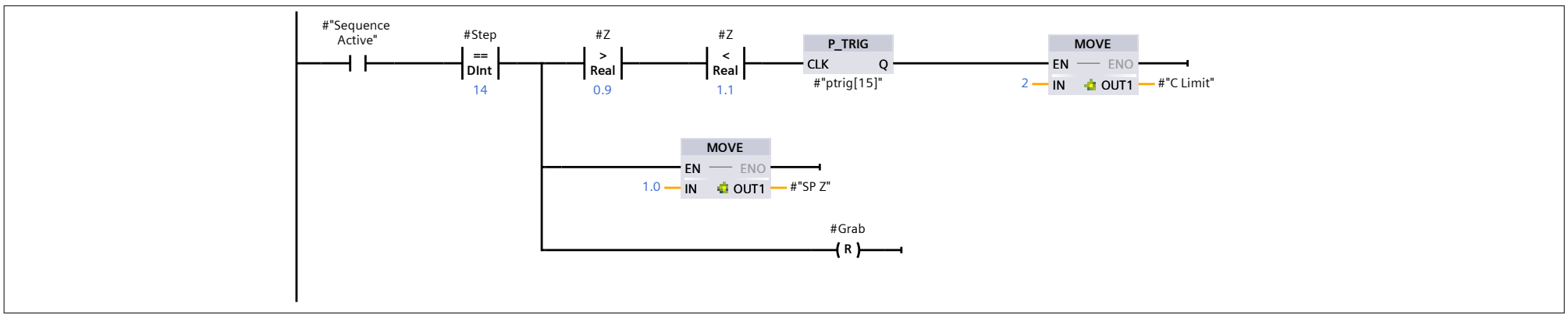

Network 19: Step 15 - Move arm to item position

Repeats step 8-14 (with different XY coordinates)

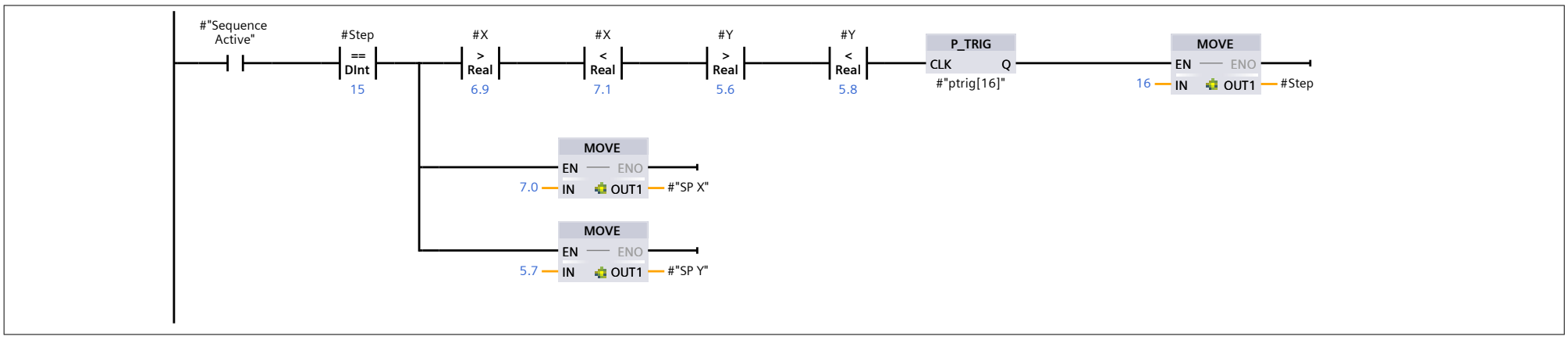

Network 20: Step 16 - Move arm down to item position

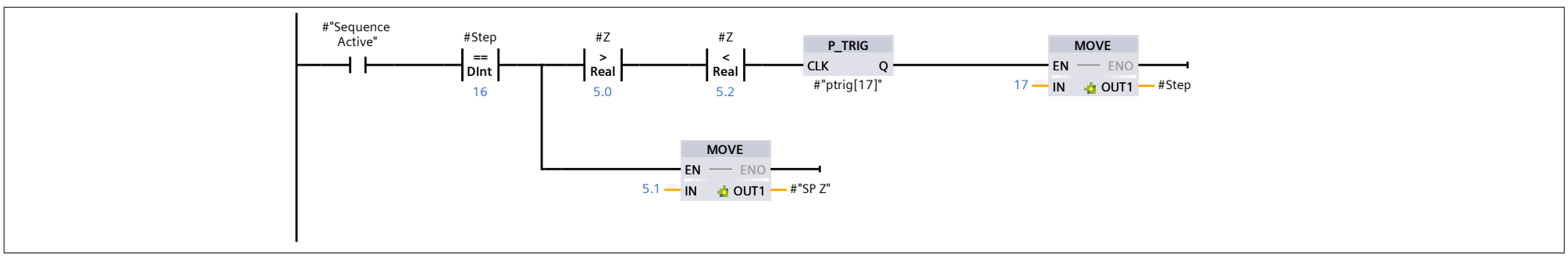

Network 21: Step 17 - Grab item

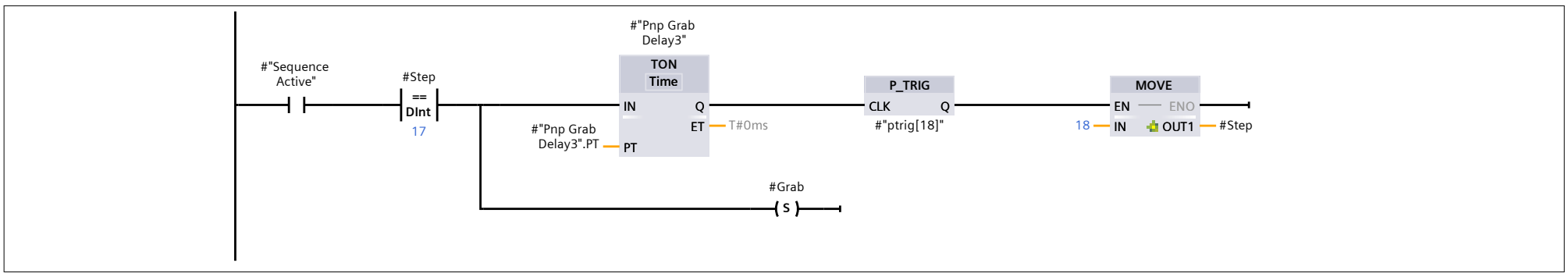

Network 22: Step 18 - Move arm up

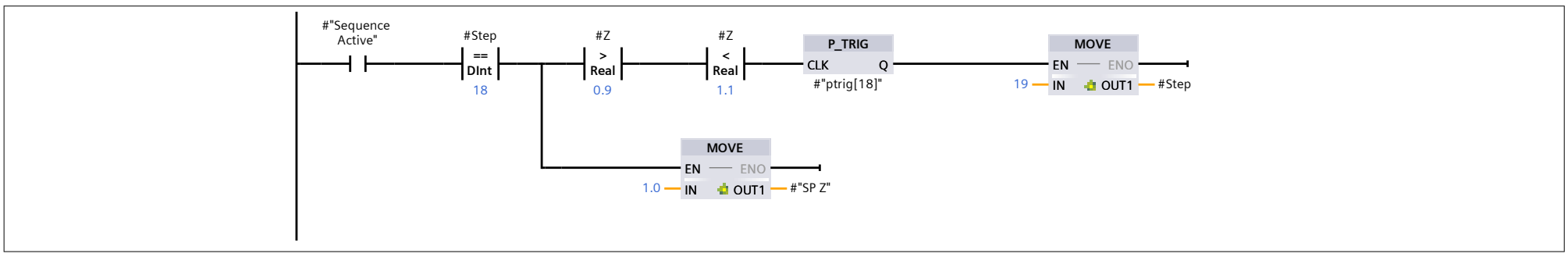

Network 23: Step 19 - Move arm to pallet position 3

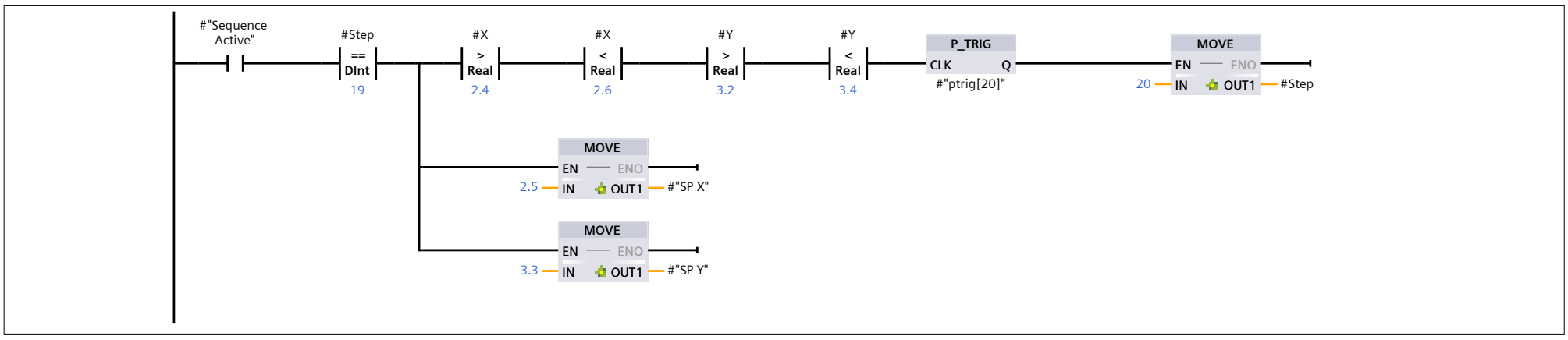

Network 24: Step 20 - Move arm down to pallet position

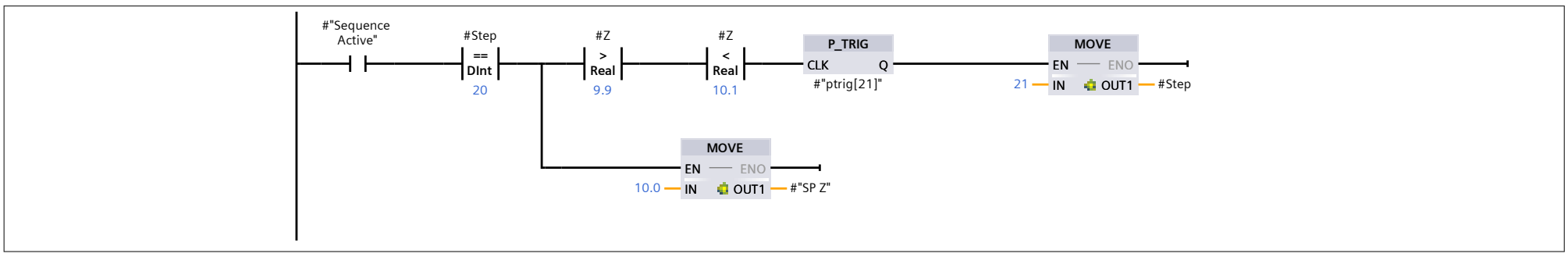

Network 25: Step 21 - Release Grab & Move Arm up

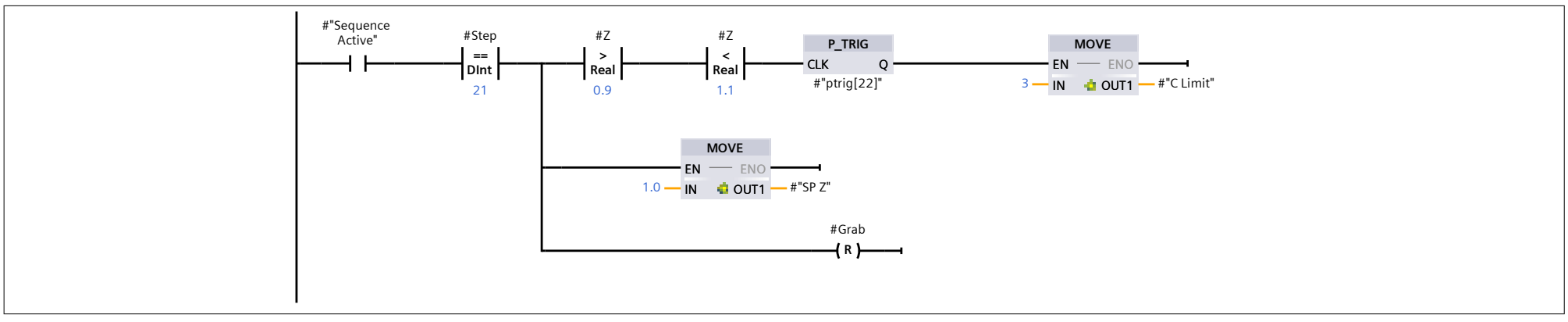

Network 26: Step 22 - Move arm to item position

Repeats step 8-14 (with different XY coordinates)

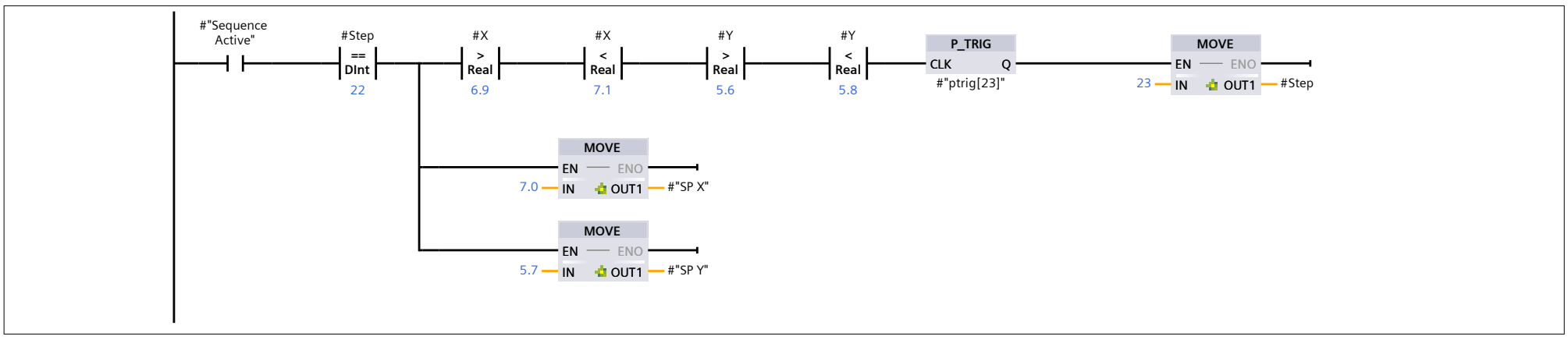

Network 27: Step 23 - Move arm down to item position

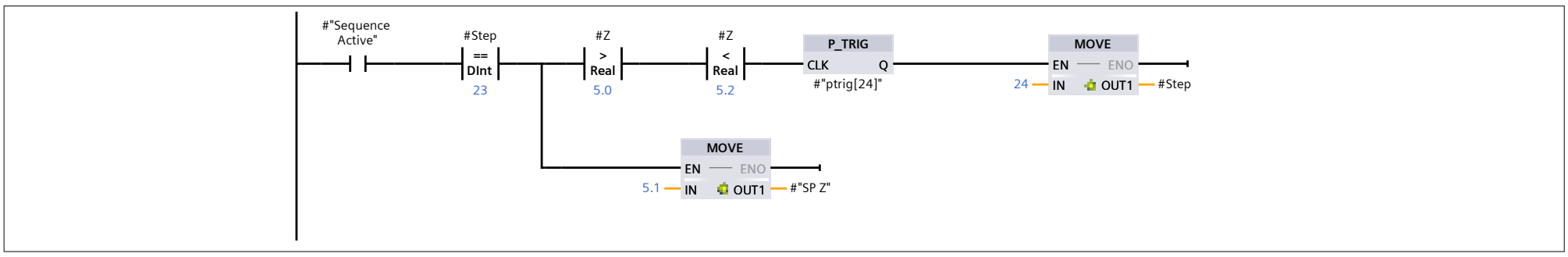

Network 28: Step 24 - Grab item

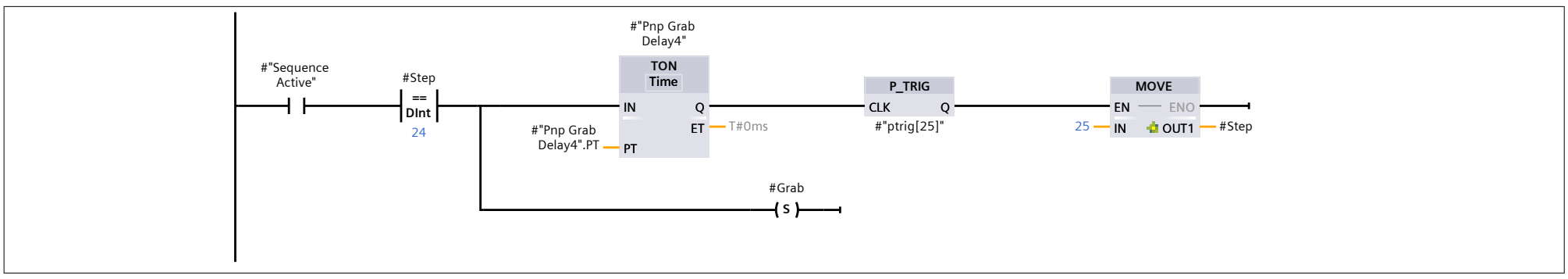

Network 29: Step 25 - Move arm up

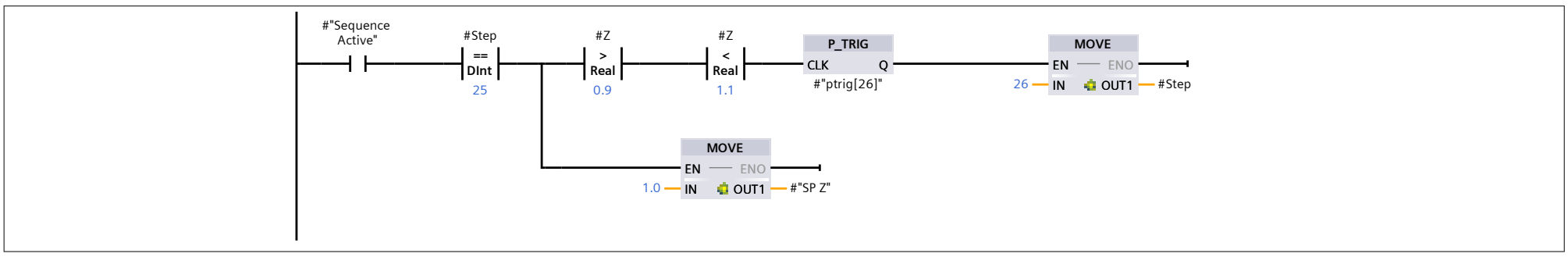

Network 30: Step 26 - Move arm to pallet position 4

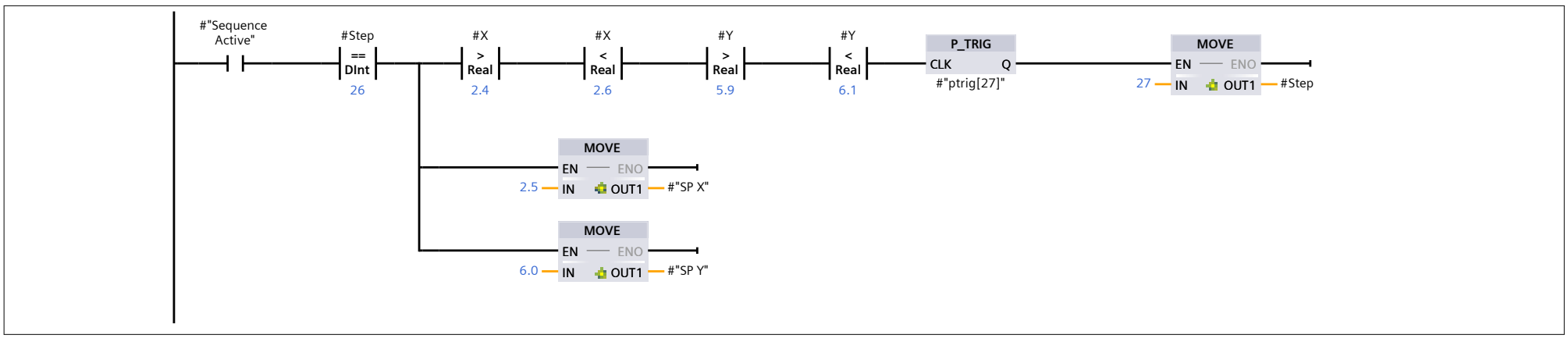

Network 31: Step 27 - Move arm down to pallet position

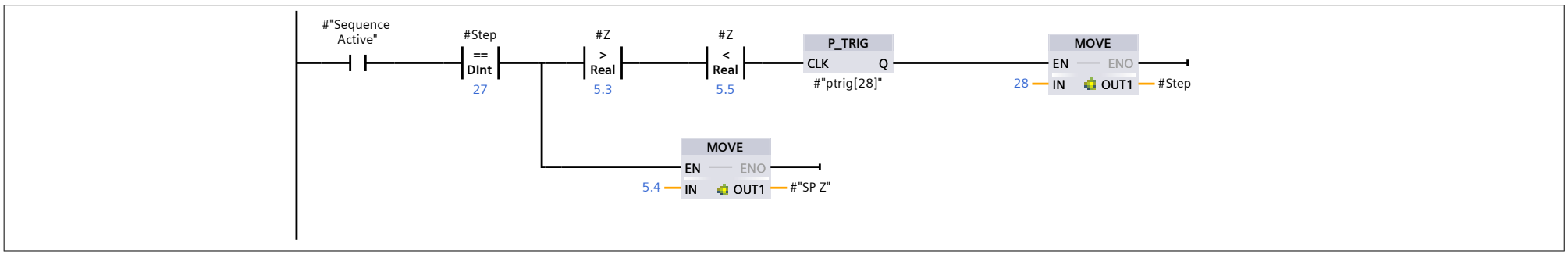

Network 32: Step 28 - Release Grab & Move Arm up

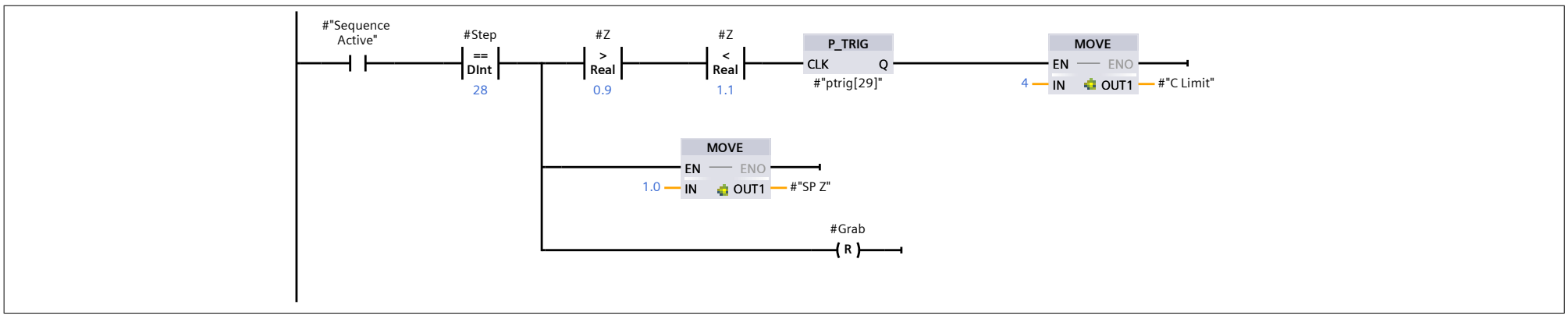

Network 33: Step 29 - Move arm to item position

Repeats step 8-14 (with different XY coordinates)

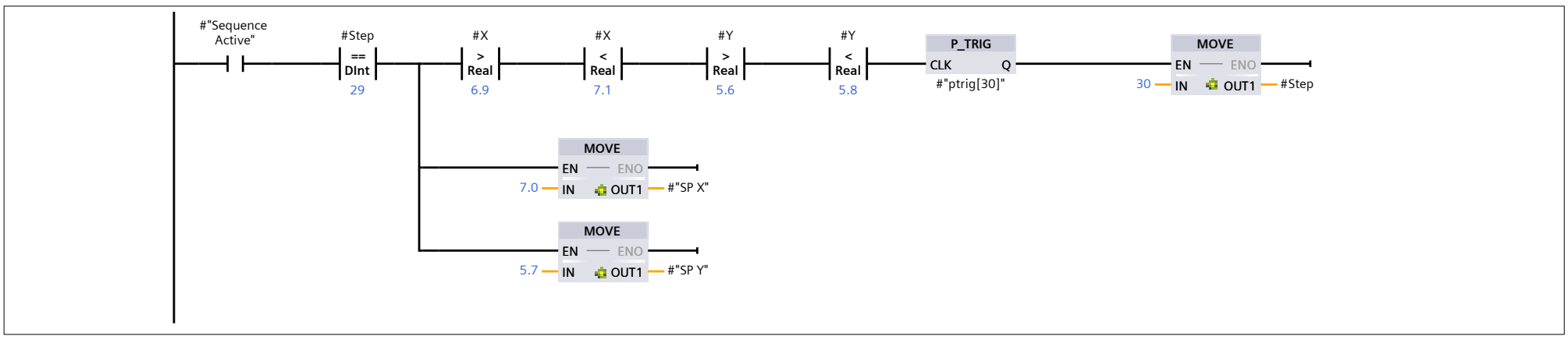

Network 34: Step 30 - Move arm down to item position

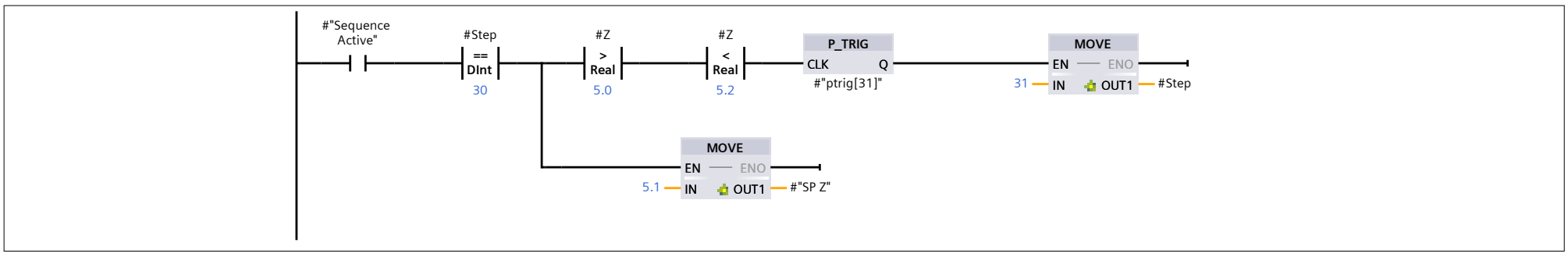

Network 35: Step 31 - Grab item

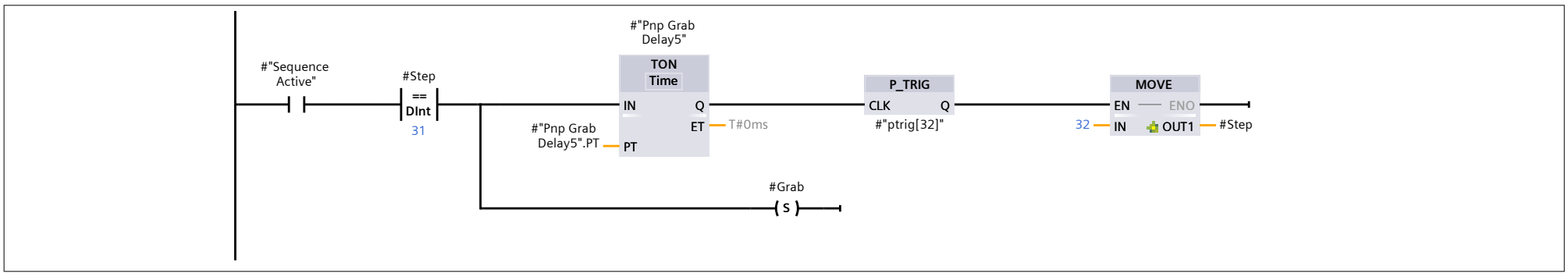

Network 36: Step 32 - Move arm up

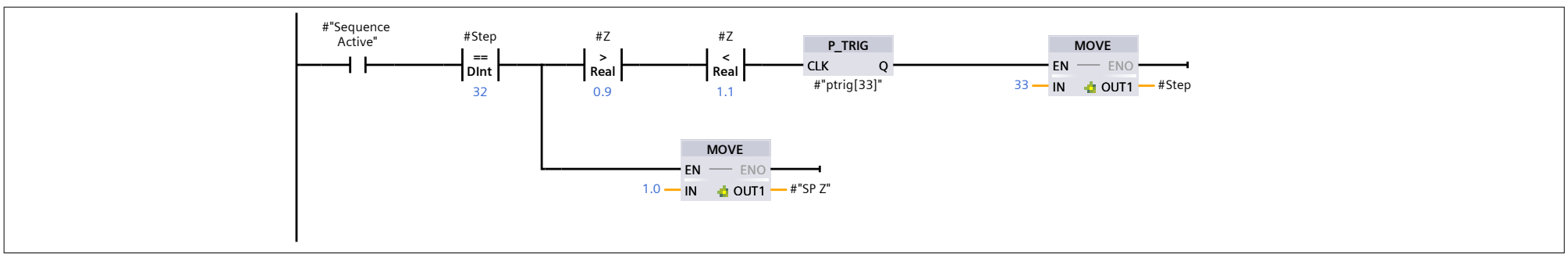

Network 37: Step 33- Move arm to pallet position 5

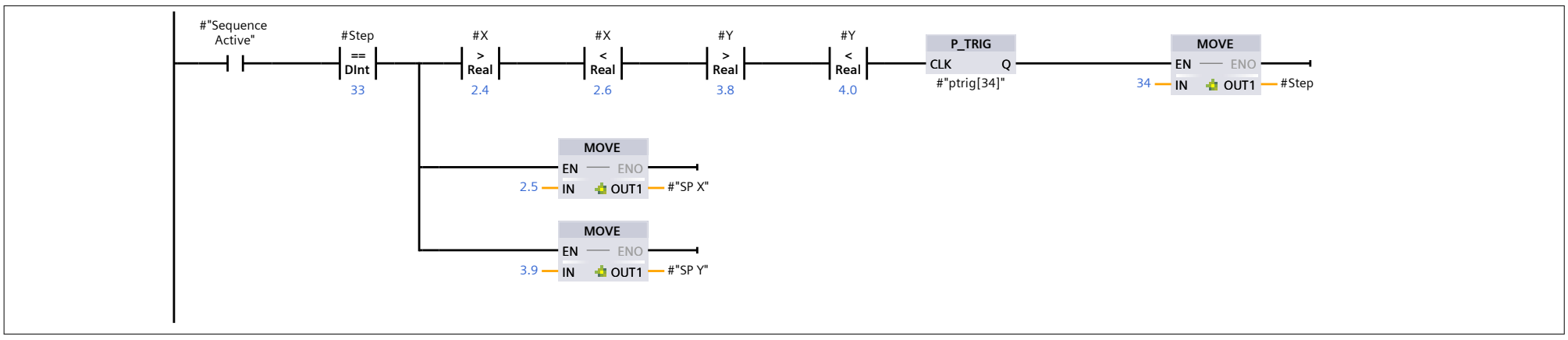

Network 38: Step 34 - Move arm down to pallet position

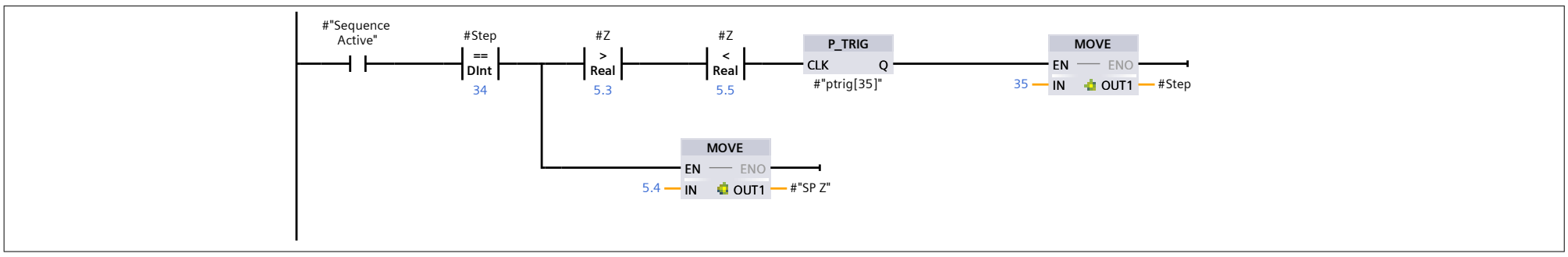

Network 39: Step 35 - Release Grab & Move Arm up

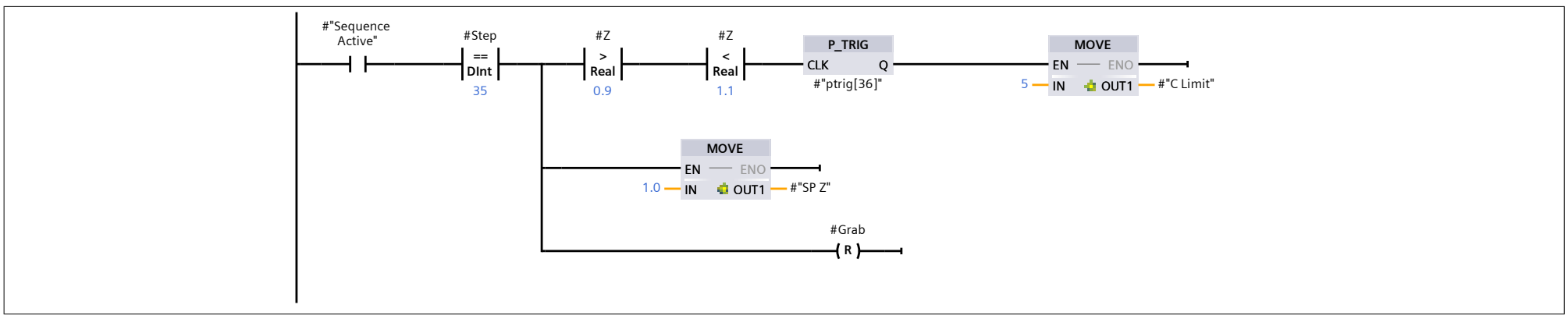

PLC_1 [CPU 1217C DC/DC/DC] / Program blocks

Pick and Place XYZ Alg_DB2 [DB21]

Pick and Place XYZ Alg_DB2 Properties							
General							
Name	Pick and Place XYZ Alg_DB2	**Number**	21	**Type**	DB	**Language**	DB
Numbering	Automatic						
Information							
Title		**Author**		**Comment**		**Family**	
Version	0.1	**User-defined ID**					

Name	Data type	Start value	Retain	Accessible from HMI/OPC UA/Web API	Writable from HMI/OPC UA/Web API	Visible in HMI engineering	Setpoint	Supervision	Comment
Input									
Pallet	Bool	false	False	True	True	True	False		
Box at place	Bool	false	False	True	True	True	False		
X	Real	0.0	False	True	True	True	False		
Y	Real	0.0	False	True	True	True	False		
Z	Real	0.0	False	True	True	True	False		
RESET	Bool	false	False	True	True	True	False		
Detected	Bool	false	False	True	True	True	False		
Output									
SP X	Real	0.0	False	True	True	True	False		
SP Y	Real	0.0	False	True	True	True	False		
SP Z	Real	0.0	False	True	True	True	False		
C+	Bool	false	False	True	True	True	False		
Grab	Bool	false	False	True	True	True	False		
Box Light R	Bool	false	False	True	True	True	False		
Box Light Y	Bool	false	False	True	True	True	False		
Box Light G	Bool	false	False	True	True	True	False		
pnp belt	Bool	false	False	True	True	True	False		
Sequence Done	Bool	false	False	True	True	True	False		
InOut									
Static									
C Limit	DInt	0	False	True	True	True	False		
FAULT	Bool	false	False	True	True	True	False		
Step	DInt	0	False	True	True	True	False		
Sequence Active	Bool	false	False	True	True	True	False		
ptrig[00]	Bool	false	False	True	True	True	False		
ptrig[0]	Bool	false	False	True	True	True	False		
ptrig[1]	Bool	false	False	True	True	True	False		
ptrig[1.1]	Bool	false	False	True	True	True	False		
ptrig[1.2]	Bool	false	False	True	True	True	False		
ptrig[2]	Bool	false	False	True	True	True	False		
ptrig[3]	Bool	false	False	True	True	True	False		
ptrig[4]	Bool	false	False	True	True	True	False		
ptrig[5]	Bool	false	False	True	True	True	False		
ptrig[6]	Bool	false	False	True	True	True	False		
ptrig[7]	Bool	false	False	True	True	True	False		
ptrig[8]	Bool	false	False	True	True	True	False		
ptrig[9]	Bool	false	False	True	True	True	False		
ptrig[10]	Bool	false	False	True	True	True	False		
ptrig[11]	Bool	false	False	True	True	True	False		
ptrig[12]	Bool	false	False	True	True	True	False		
ptrig[13]	Bool	false	False	True	True	True	False		
ptrig[14]	Bool	false	False	True	True	True	False		
ptrig[15]	Bool	false	False	True	True	True	False		
ptrig[16]	Bool	false	False	True	True	True	False		
ptrig[17]	Bool	false	False	True	True	True	False		
ptrig[18]	Bool	false	False	True	True	True	False		
ptrig[19]	Bool	false	False	True	True	True	False		
ptrig[20]	Bool	false	False	True	True	True	False		
ptrig[21]	Bool	false	False	True	True	True	False		
ptrig[22]	Bool	false	False	True	True	True	False		
ptrig[23]	Bool	false	False	True	True	True	False		
ptrig[24]	Bool	false	False	True	True	True	False		
ptrig[25]	Bool	false	False	True	True	True	False		
ptrig[26]	Bool	false	False	True	True	True	False		
ptrig[27]	Bool	false	False	True	True	True	False		
ptrig[28]	Bool	false	False	True	True	True	False		
ptrig[29]	Bool	false	False	True	True	True	False		
ptrig[30]	Bool	false	False	True	True	True	False		
ptrig[31]	Bool	false	False	True	True	True	False		

Name	Data type	Start value	Retain	Accessible from HMI/OPC UA/Web API	Writable from HMI/OPC UA/Web API	Visible in HMI engineering	Setpoint	Supervision	Comment
ptrig[32]	Bool	false	False	True	True	True	False		
ptrig[33]	Bool	false	False	True	True	True	False		
ptrig[34]	Bool	false	False	True	True	True	False		
ptrig[35]	Bool	false	False	True	True	True	False		
ptrig[36]	Bool	false	False	True	True	True	False		
Pnp Grab Delay	TON_TIME		False	True	True	True	False		
PT	Time	T#1s	False	True	True	True	False		
ET	Time	T#0ms	False	True	False	True	False		
IN	Bool	false	False	True	True	True	False		
Q	Bool	false	False	True	False	True	False		
Pnp Grab Delay2	TON_TIME		False	True	True	True	False		
PT	Time	T#1s	False	True	True	True	False		
ET	Time	T#0ms	False	True	False	True	False		
IN	Bool	false	False	True	True	True	False		
Q	Bool	false	False	True	False	True	False		
Pnp Grab Delay3	TON_TIME		False	True	True	True	False		
PT	Time	T#1s	False	True	True	True	False		
ET	Time	T#0ms	False	True	False	True	False		
IN	Bool	false	False	True	True	True	False		
Q	Bool	false	False	True	False	True	False		
Pnp Grab Delay4	TON_TIME		False	True	True	True	False		
PT	Time	T#1s	False	True	True	True	False		
ET	Time	T#0ms	False	True	False	True	False		
IN	Bool	false	False	True	True	True	False		
Q	Bool	false	False	True	False	True	False		
Pnp Grab Delay5	TON_TIME		False	True	True	True	False		
PT	Time	T#1s	False	True	True	True	False		
ET	Time	T#0ms	False	True	False	True	False		
IN	Bool	false	False	True	True	True	False		
Q	Bool	false	False	True	False	True	False		

PLC_1 [CPU 1217C DC/DC/DC] / Program blocks

Pallet-stack [FB3]

Pallet-stack Properties							
General							
Name	Pallet-stack	**Number**	3	**Type**	FB	**Language**	LAD
Numbering	Automatic						
Information							
Title		**Author**		**Comment**		**Family**	
Version	0.1	**User-defined ID**					

Name	Data type	Default value	Retain	Accessible from HMI/OPC UA/Web API	Writable from HMI/OPC UA/Web API	Visible in HMI engineering	Setpoint	Supervision	Comment
Input									
RESET	Bool	false	Non-retain	True	True	True	False		
Output									
DONE	Bool	false	Non-retain	True	True	True	False		
Milestone	Bool	false	Non-retain	True	True	True	False		
FAULT	Bool	false	Non-retain	True	True	True	False		
InOut									
Static									
Box Count_V	CTU_INT		Non-retain	True	True	True	False		Vertical Box Counter
CU	Bool	false	Non-retain	True	True	True	False		
CD	Bool	false	Non-retain	True	True	True	False		
R	Bool	false	Non-retain	True	True	True	False		
LD	Bool	false	Non-retain	True	True	True	False		
QU	Bool	false	Non-retain	True	True	True	False		
QD	Bool	false	Non-retain	True	True	True	False		
PV	Int	2	Non-retain	True	True	True	False		
CV	Int	0	Non-retain	True	True	True	False		
Box Count_H	CTU_INT		Non-retain	True	True	True	False		Horizontial Box Counter
CU	Bool	false	Non-retain	True	True	True	False		
CD	Bool	false	Non-retain	True	True	True	False		
R	Bool	false	Non-retain	True	True	True	False		
LD	Bool	false	Non-retain	True	True	True	False		
QU	Bool	false	Non-retain	True	True	True	False		
QD	Bool	false	Non-retain	True	True	True	False		
PV	Int	3	Non-retain	True	True	True	False		
CV	Int	0	Non-retain	True	True	True	False		
Layer	CTU_INT		Non-retain	True	True	True	False		
CU	Bool	false	Non-retain	True	True	True	False		
CD	Bool	false	Non-retain	True	True	True	False		
R	Bool	false	Non-retain	True	True	True	False		
LD	Bool	false	Non-retain	True	True	True	False		
QU	Bool	false	Non-retain	True	True	True	False		
QD	Bool	false	Non-retain	True	True	True	False		
PV	Int	2	Non-retain	True	True	True	False		
CV	Int	0	Non-retain	True	True	True	False		
Vlayer	CTU_INT		Non-retain	True	True	True	False		Side stack(Vertical)
CU	Bool	false	Non-retain	True	True	True	False		
CD	Bool	false	Non-retain	True	True	True	False		
R	Bool	false	Non-retain	True	True	True	False		
LD	Bool	false	Non-retain	True	True	True	False		
QU	Bool	false	Non-retain	True	True	True	False		
QD	Bool	false	Non-retain	True	True	True	False		
PV	Int	3	Non-retain	True	True	True	False		
CV	Int	0	Non-retain	True	True	True	False		
Hlayer	CTU_INT		Non-retain	True	True	True	False		Side stack(Horizontial)
CU	Bool	false	Non-retain	True	True	True	False		
CD	Bool	false	Non-retain	True	True	True	False		
R	Bool	false	Non-retain	True	True	True	False		
LD	Bool	false	Non-retain	True	True	True	False		
QU	Bool	false	Non-retain	True	True	True	False		
QD	Bool	false	Non-retain	True	True	True	False		
PV	Int	2	Non-retain	True	True	True	False		
CV	Int	0	Non-retain	True	True	True	False		
Push_delay	TON_TIME		Retain	True	True	True	True		
PT	Time	T#2s	Retain	True	True	True	False		
ET	Time	T#0ms	Retain	True	False	True	False		
IN	Bool	false	Retain	True	True	True	False		
Q	Bool	false	Retain	True	False	True	False		

Name	Data type	Default value	Retain	Accessible from HMI/OPC UA/Web API	Writable from HMI/OPC UA/Web API	Visible in HMI engineering	Setpoint	Supervision	Comment
Push_delay2	TON_TIME		Non-retain	True	True	True	True		
PT	Time	T#2s	Non-retain	True	True	True	False		
ET	Time	T#0ms	Non-retain	True	False	True	False		
IN	Bool	false	Non-retain	True	True	True	False		
Q	Bool	false	Non-retain	True	False	True	False		
Pallet_Delay	TOF_TIME		Non-retain	True	True	True	False		
PT	Time	T#100ms	Non-retain	True	True	True	False		
ET	Time	T#0ms	Non-retain	True	False	True	False		
IN	Bool	false	Non-retain	True	True	True	False		
Q	Bool	false	Non-retain	True	False	True	False		
Milestone Timer	TON_TIME		Non-retain	True	True	True	True		
PT	Time	T#1s	Non-retain	True	True	True	False		
ET	Time	T#0ms	Non-retain	True	False	True	False		
IN	Bool	false	Non-retain	True	True	True	False		
Q	Bool	false	Non-retain	True	False	True	False		
Milestone Timer_1	TON_TIME		Non-retain	True	True	True	True		
PT	Time	T#0.5s	Non-retain	True	True	True	False		
ET	Time	T#0ms	Non-retain	True	False	True	False		
IN	Bool	false	Non-retain	True	True	True	False		
Q	Bool	false	Non-retain	True	False	True	False		
Reset_delay_1	TON_TIME		Non-retain	True	True	True	True		
PT	Time	T#1s	Non-retain	True	True	True	False		
ET	Time	T#0ms	Non-retain	True	False	True	False		
IN	Bool	false	Non-retain	True	True	True	False		
Q	Bool	false	Non-retain	True	False	True	False		
Reset_delay_2	TON_TIME		Non-retain	True	True	True	True		
PT	Time	T#2s	Non-retain	True	True	True	False		
ET	Time	T#0ms	Non-retain	True	False	True	False		
IN	Bool	false	Non-retain	True	True	True	False		
Q	Bool	false	Non-retain	True	False	True	False		
Done_delay	TON_TIME		Non-retain	True	True	True	True		
PT	Time	T#4s	Non-retain	True	True	True	False		
ET	Time	T#0ms	Non-retain	True	False	True	False		
IN	Bool	false	Non-retain	True	True	True	False		
Q	Bool	false	Non-retain	True	False	True	False		
Done_trig_delay	TON_TIME		Non-retain	True	True	True	True		
PT	Time	T#700ms	Non-retain	True	True	True	False		
ET	Time	T#0ms	Non-retain	True	False	True	False		
IN	Bool	false	Non-retain	True	True	True	False		
Q	Bool	false	Non-retain	True	False	True	False		
Pallet_box_delay	TON_TIME		Non-retain	True	True	True	True		
PT	Time	T#5s	Non-retain	True	True	True	False		
ET	Time	T#0ms	Non-retain	True	False	True	False		
IN	Bool	false	Non-retain	True	True	True	False		
Q	Bool	false	Non-retain	True	False	True	False		
Temp									
ptrig[1]	Bool								
ptrig[2]	Bool								
ptrig[3]	Bool								
Constant									

Network 1: Pre-Pallet

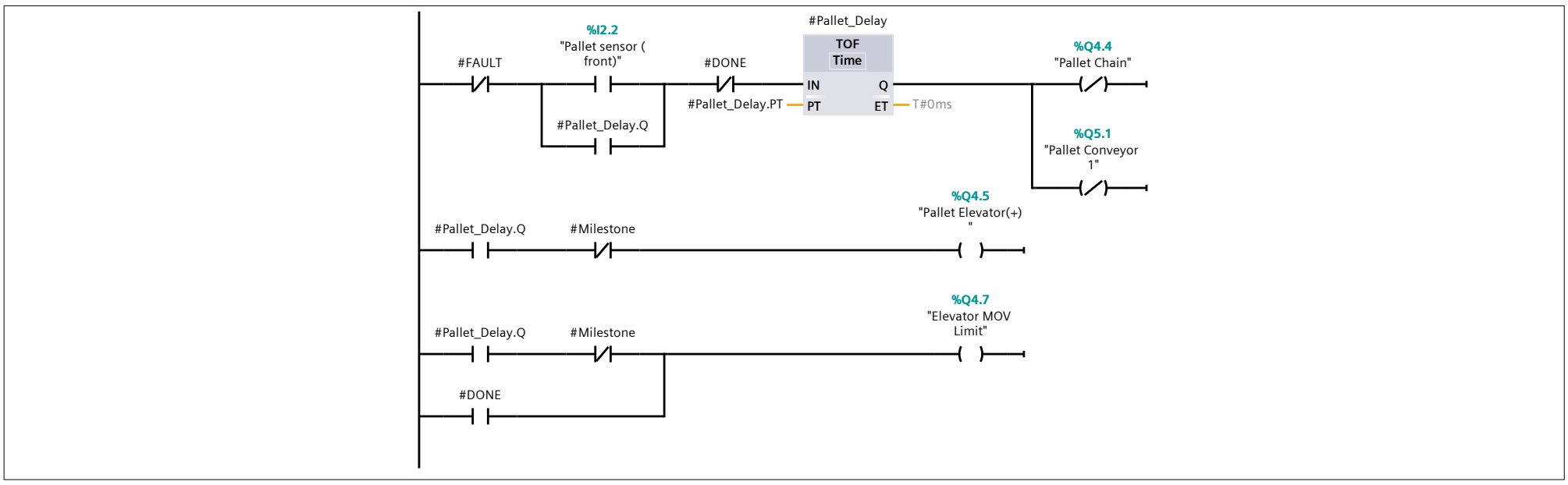

Network 2: Vertical and Horizontal Stacking

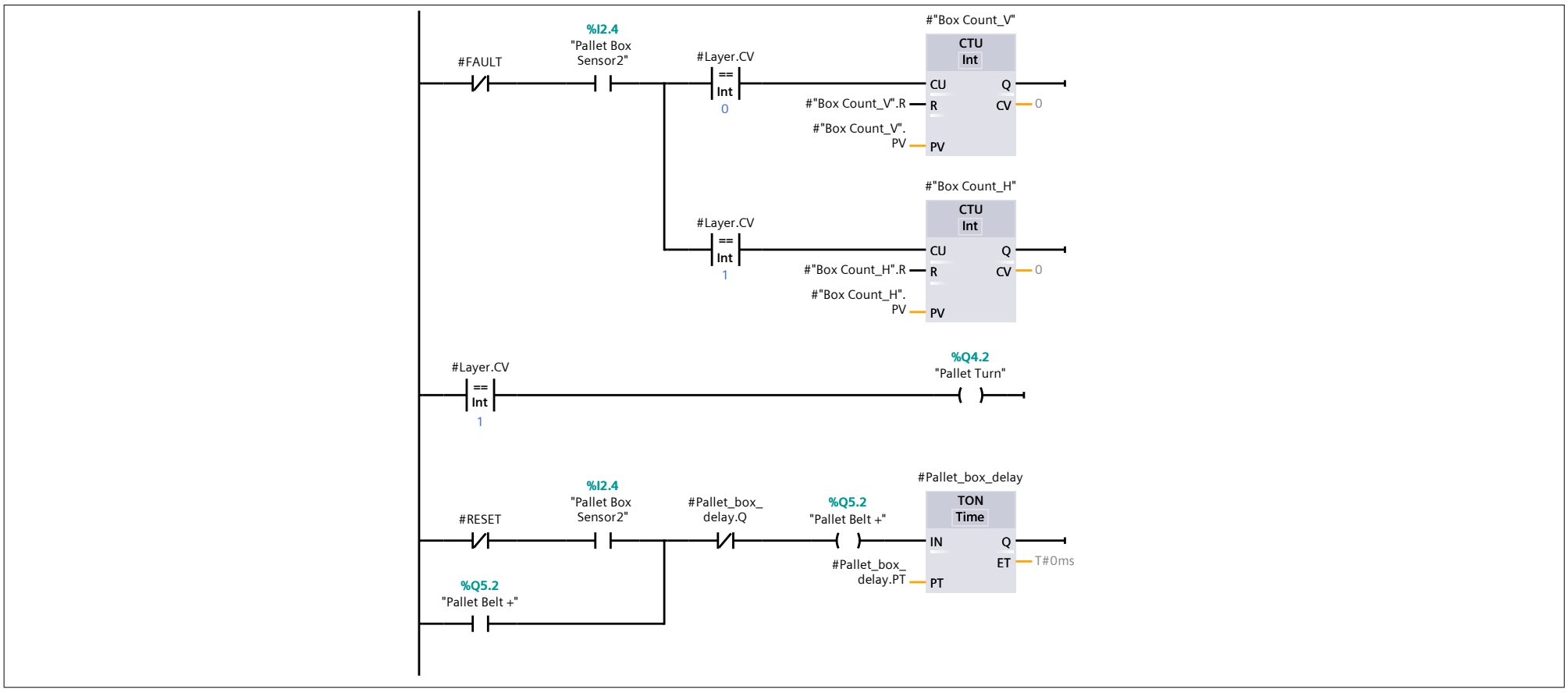

Network 3: Pallet pusher

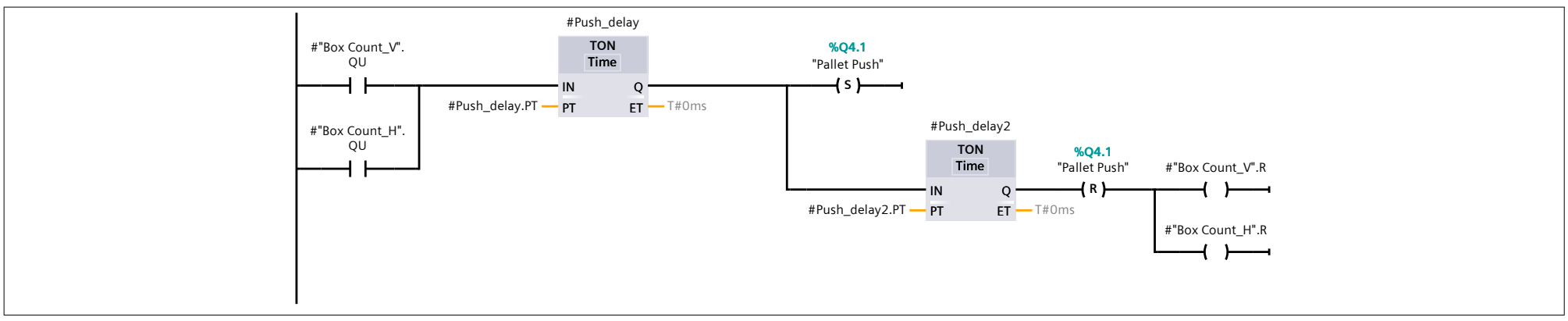

Network 4: Side Stack Counter

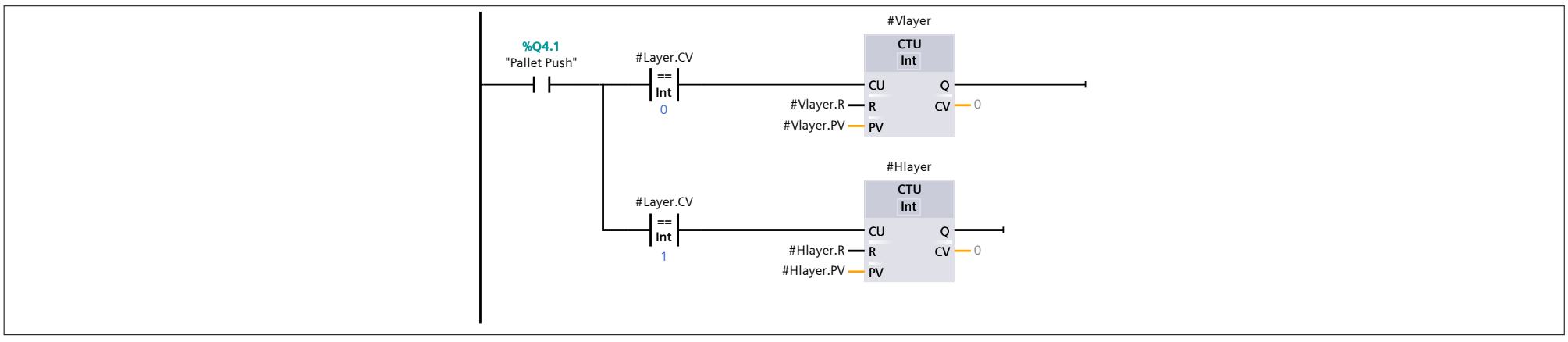

Network 5: Pallet transfer

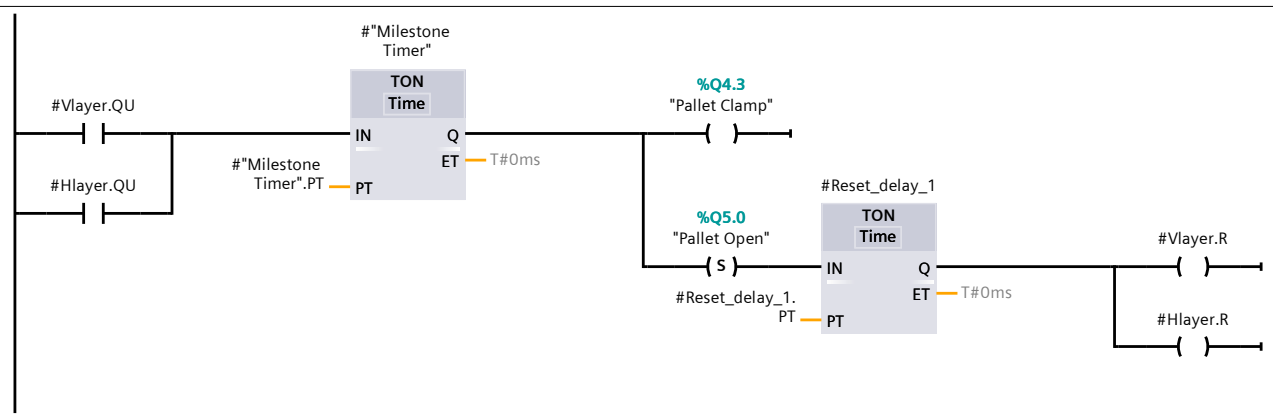

Network 6: Milestone

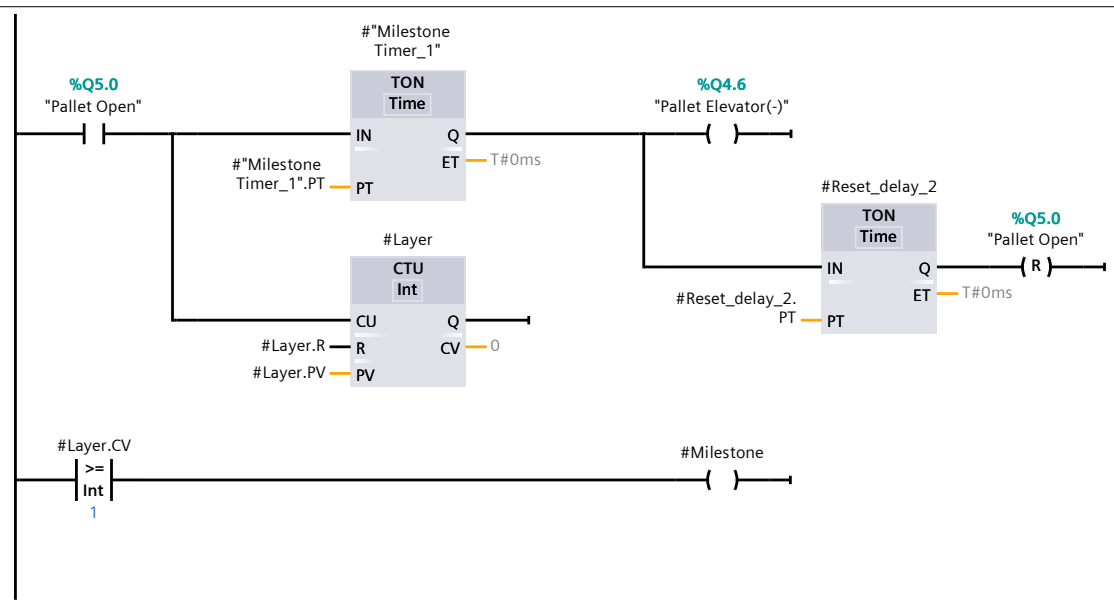

Network 7: DONE

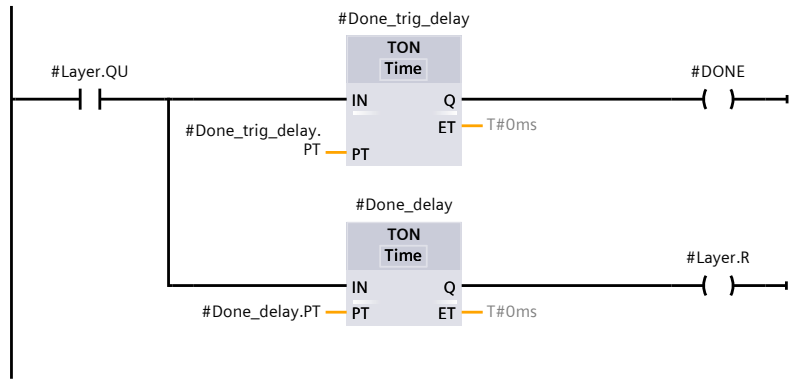

Network 8: FAULT

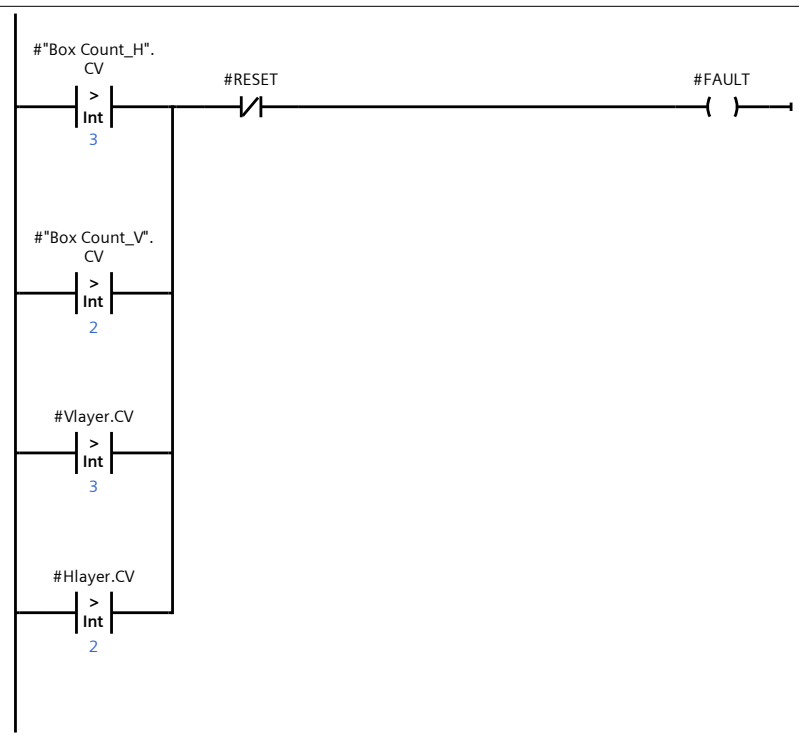

PLC_1 [CPU 1217C DC/DC/DC] / Program blocks

Palletizer [DB25]

Palletizer Properties							
General							
Name	Palletizer	**Number**	25	**Type**	DB	**Language**	DB
Numbering	Automatic						
Information							
Title		**Author**		**Comment**		**Family**	
Version	0.1	**User-defined ID**					

Name	Data type	Start value	Retain	Accessible from HMI/OPC UA/Web API	Writable from HMI/OPC UA/Web API	Visible in HMI engineering	Setpoint	Supervision	Comment
Input									
RESET	Bool	false	False	True	True	True	False		
Output									
DONE	Bool	false	False	True	True	True	False		
Milestone	Bool	false	False	True	True	True	False		
FAULT	Bool	false	False	True	True	True	False		
InOut									
Static									
Box Count_V	CTU_INT		False	True	True	True	False		Vertical Box Counter
CU	Bool	false	False	True	True	True	False		
CD	Bool	false	False	True	True	True	False		
R	Bool	false	False	True	True	True	False		
LD	Bool	false	False	True	True	True	False		
QU	Bool	false	False	True	True	True	False		
QD	Bool	false	False	True	True	True	False		
PV	Int	2	False	True	True	True	False		
CV	Int	0	False	True	True	True	False		
Box Count_H	CTU_INT		False	True	True	True	False		Horizontial Box Counter
CU	Bool	false	False	True	True	True	False		
CD	Bool	false	False	True	True	True	False		
R	Bool	false	False	True	True	True	False		
LD	Bool	false	False	True	True	True	False		
QU	Bool	false	False	True	True	True	False		
QD	Bool	false	False	True	True	True	False		
PV	Int	3	False	True	True	True	False		
CV	Int	0	False	True	True	True	False		
Layer	CTU_INT		False	True	True	True	False		
CU	Bool	false	False	True	True	True	False		
CD	Bool	false	False	True	True	True	False		
R	Bool	false	False	True	True	True	False		
LD	Bool	false	False	True	True	True	False		
QU	Bool	false	False	True	True	True	False		
QD	Bool	false	False	True	True	True	False		
PV	Int	2	False	True	True	True	False		
CV	Int	0	False	True	True	True	False		
Vlayer	CTU_INT		False	True	True	True	False		Side stack(Vertical)
CU	Bool	false	False	True	True	True	False		
CD	Bool	false	False	True	True	True	False		
R	Bool	false	False	True	True	True	False		
LD	Bool	false	False	True	True	True	False		
QU	Bool	false	False	True	True	True	False		
QD	Bool	false	False	True	True	True	False		
PV	Int	3	False	True	True	True	False		
CV	Int	0	False	True	True	True	False		
Hlayer	CTU_INT		False	True	True	True	False		Side stack(Horizontial)
CU	Bool	false	False	True	True	True	False		
CD	Bool	false	False	True	True	True	False		
R	Bool	false	False	True	True	True	False		
LD	Bool	false	False	True	True	True	False		
QU	Bool	false	False	True	True	True	False		
QD	Bool	false	False	True	True	True	False		
PV	Int	2	False	True	True	True	False		
CV	Int	0	False	True	True	True	False		
Push_delay	TON_TIME		True	True	True	True	True		
PT	Time	T#2s	True	True	True	True	False		
ET	Time	T#0ms	True	True	False	True	False		
IN	Bool	false	True	True	True	True	False		
Q	Bool	false	True	True	False	True	False		

Name	Data type	Start value	Retain	Accessible from HMI/OPC UA/Web API	Writ-able from HMI/ OPC UA/ Web API	Visible in HMI engi-neering	Setpoint	Supervi-sion	Comment
Push_delay2	TON_TIME		False	True	True	True	True		
PT	Time	T#2s	False	True	True	True	False		
ET	Time	T#0ms	False	True	False	True	False		
IN	Bool	false	False	True	True	True	False		
Q	Bool	false	False	True	False	True	False		
Pallet_Delay	TOF_TIME		False	True	True	True	False		
PT	Time	T#100ms	False	True	True	True	False		
ET	Time	T#0ms	False	True	False	True	False		
IN	Bool	false	False	True	True	True	False		
Q	Bool	false	False	True	False	True	False		
Milestone Timer	TON_TIME		False	True	True	True	True		
PT	Time	T#1s	False	True	True	True	False		
ET	Time	T#0ms	False	True	False	True	False		
IN	Bool	false	False	True	True	True	False		
Q	Bool	false	False	True	False	True	False		
Milestone Timer_1	TON_TIME		False	True	True	True	True		
PT	Time	T#0.5s	False	True	True	True	False		
ET	Time	T#0ms	False	True	False	True	False		
IN	Bool	false	False	True	True	True	False		
Q	Bool	false	False	True	False	True	False		
Reset_delay_1	TON_TIME		False	True	True	True	True		
PT	Time	T#1s	False	True	True	True	False		
ET	Time	T#0ms	False	True	False	True	False		
IN	Bool	false	False	True	True	True	False		
Q	Bool	false	False	True	False	True	False		
Reset_delay_2	TON_TIME		False	True	True	True	True		
PT	Time	T#2s	False	True	True	True	False		
ET	Time	T#0ms	False	True	False	True	False		
IN	Bool	false	False	True	True	True	False		
Q	Bool	false	False	True	False	True	False		
Done_delay	TON_TIME		False	True	True	True	True		
PT	Time	T#4s	False	True	True	True	False		
ET	Time	T#0ms	False	True	False	True	False		
IN	Bool	false	False	True	True	True	False		
Q	Bool	false	False	True	False	True	False		
Done_trig_delay	TON_TIME		False	True	True	True	True		
PT	Time	T#700ms	False	True	True	True	False		
ET	Time	T#0ms	False	True	False	True	False		
IN	Bool	false	False	True	True	True	False		
Q	Bool	false	False	True	False	True	False		
Pallet_box_delay	TON_TIME		False	True	True	True	True		
PT	Time	T#4s	False	True	True	True	False		
ET	Time	T#0ms	False	True	False	True	False		
IN	Bool	false	False	True	True	True	False		
Q	Bool	false	False	True	False	True	False		

PLC_1 [CPU 1217C DC/DC/DC] / Program blocks

Pallet_load [FB4]

Pallet_load Properties							
General							
Name	Pallet_load	**Number**	4	**Type**	FB	**Language**	LAD
Numbering	Automatic						
Information							
Title		**Author**		**Comment**		**Family**	
Version	0.1	**User-defined ID**					

Name	Data type	Default value	Retain	Accessible from HMI/OPC UA/Web API	Writable from HMI/OPC UA/Web API	Visible in HMI engineering	Setpoint	Supervision	Comment
Input									
Loading Sensor	Bool	false	Non-retain	True	True	True	False		
Output									
Sequence Start	Bool	false	Non-retain	True	True	True	False		
Sequence Done	Bool	false	Non-retain	True	True	True	False		
FAULT	Bool	false	Non-retain	True	True	True	False		
Preloading Conveyor	Bool	false	Non-retain	True	True	True	False		
Loading Conveyor	Bool	false	Non-retain	True	True	True	False		
Left Crane	Bool	false	Non-retain	True	True	True	False		
Right Crane	Bool	false	Non-retain	True	True	True	False		
Crane Lift	Bool	false	Non-retain	True	True	True	False		
Crane Target Pos	DInt	0	Non-retain	True	True	True	False		
InOut									
Static									
Step	DInt	0	Non-retain	True	True	True	False		
Loading Sensor Delay	TON_TIME		Non-retain	True	True	True	False		
PT	Time	T#2s	Non-retain	True	True	True	False		
ET	Time	T#0ms	Non-retain	True	False	True	False		
IN	Bool	false	Non-retain	True	True	True	False		
Q	Bool	false	Non-retain	True	False	True	False		
Loading Delay	TOF_TIME		Non-retain	True	True	True	False		
PT	Time	T#1s	Non-retain	True	True	True	False		
ET	Time	T#0ms	Non-retain	True	False	True	False		
IN	Bool	false	Non-retain	True	True	True	False		
Q	Bool	false	Non-retain	True	False	True	False		
Unloading Delay	TON_TIME		Non-retain	True	True	True	True		
PT	Time	T#2s	Non-retain	True	True	True	False		
ET	Time	T#0ms	Non-retain	True	False	True	False		
IN	Bool	false	Non-retain	True	True	True	False		
Q	Bool	false	Non-retain	True	False	True	False		
Unloading Delay2	TON_TIME		Non-retain	True	True	True	True		
PT	Time	T#1s	Non-retain	True	True	True	False		
ET	Time	T#0ms	Non-retain	True	False	True	False		
IN	Bool	false	Non-retain	True	True	True	False		
Q	Bool	false	Non-retain	True	False	True	False		
Step 2 delay	TON_TIME		Non-retain	True	True	True	True		
PT	Time	T#1s	Non-retain	True	True	True	False		
ET	Time	T#0ms	Non-retain	True	False	True	False		
IN	Bool	false	Non-retain	True	True	True	False		
Q	Bool	false	Non-retain	True	False	True	False		
Step 2 Proc	TON_TIME		Non-retain	True	True	True	True		
PT	Time	T#8s	Non-retain	True	True	True	False		
ET	Time	T#0ms	Non-retain	True	False	True	False		
IN	Bool	false	Non-retain	True	True	True	False		
Q	Bool	false	Non-retain	True	False	True	False		
Crane Reset	TON_TIME		Non-retain	True	True	True	True		
PT	Time	T#2s	Non-retain	True	True	True	False		
ET	Time	T#0ms	Non-retain	True	False	True	False		
IN	Bool	false	Non-retain	True	True	True	False		
Q	Bool	false	Non-retain	True	False	True	False		
Done_cooldown	TON_TIME		Non-retain	True	True	True	True		
PT	Time	T#5s	Non-retain	True	True	True	False		
ET	Time	T#0ms	Non-retain	True	False	True	False		
IN	Bool	false	Non-retain	True	True	True	False		
Q	Bool	false	Non-retain	True	False	True	False		
Pallets_stored	CTU_DINT		Non-retain	True	True	True	False		
CU	Bool	false	Non-retain	True	True	True	False		

Name	Data type	Default value	Retain	Accessible from HMI/OPC UA/Web API	Writable from HMI/OPC UA/Web API	Visible in HMI engineering	Setpoint	Supervision	Comment
CD	Bool	false	Non-retain	True	True	True	False		
R	Bool	false	Non-retain	True	True	True	False		
LD	Bool	false	Non-retain	True	True	True	False		
QU	Bool	false	Non-retain	True	True	True	False		
QD	Bool	false	Non-retain	True	True	True	False		
PV	DInt	54	Non-retain	True	True	True	False		
CV	DInt	0	Non-retain	True	True	True	False		
Temp									
ptrig[0]	Bool								
ptrig[1]	Bool								
ptrig[2]	Bool								
ptrig[3]	Bool								
ptrig[4]	Bool								
ptrig[5]	Bool								
ptrig[6]	Bool								
Constant									

Network 1: Faults

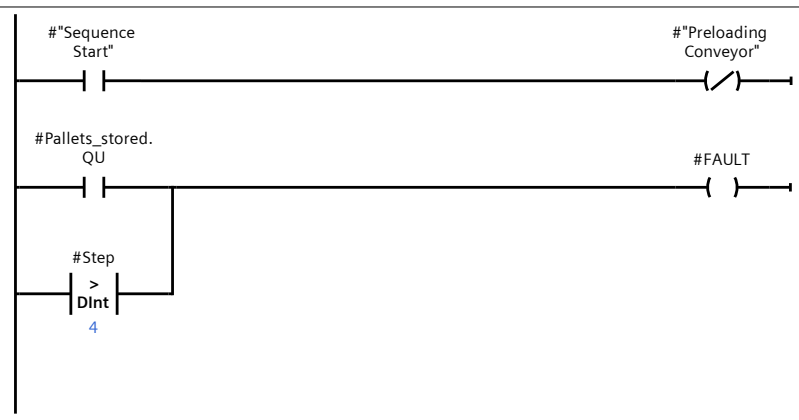

Network 2: Pallet stopper

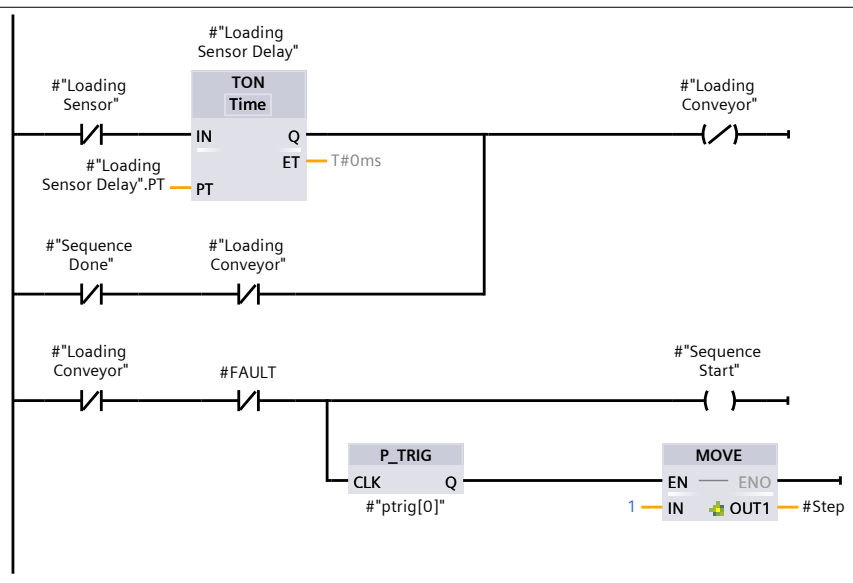

Network 3: Step 1 - Pallet Pick up

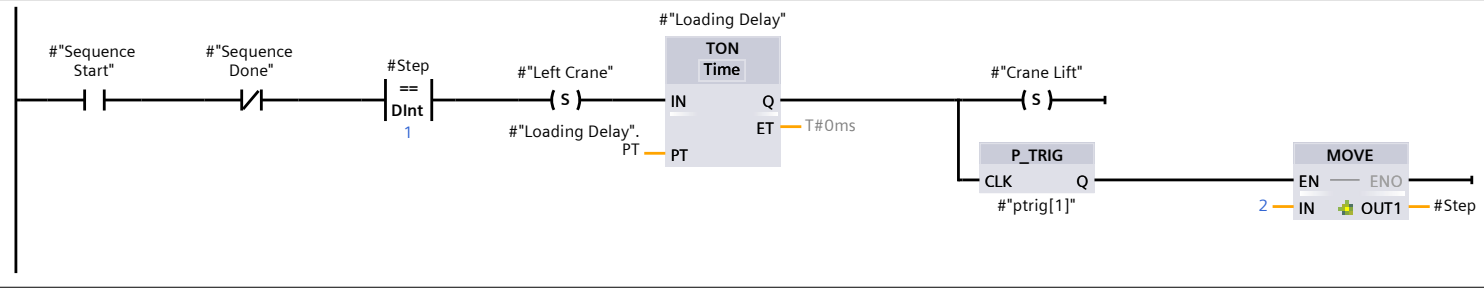

Network 4: Step 2 - Bring pallet to the desired location

Need dynamic move - MATH
Up to 54 slots

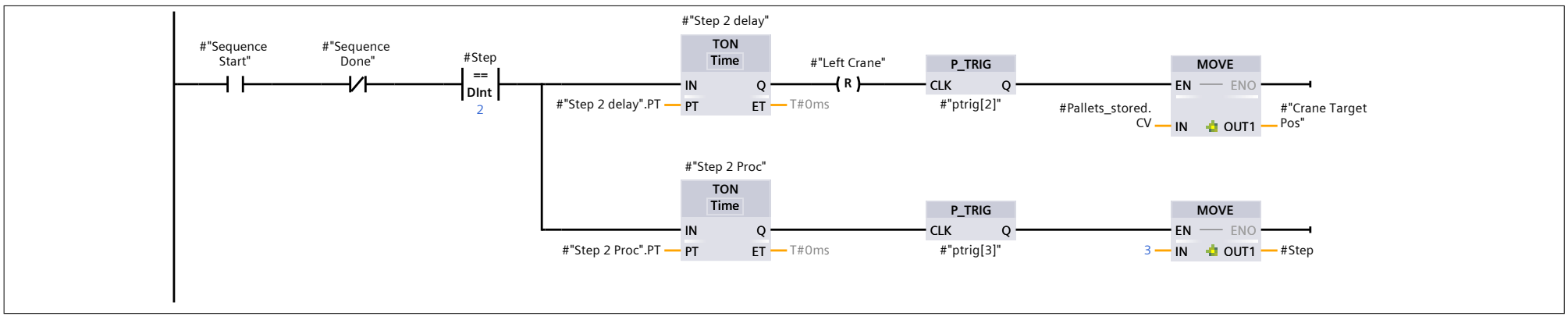

Network 5: Step 3 - Place on the rack

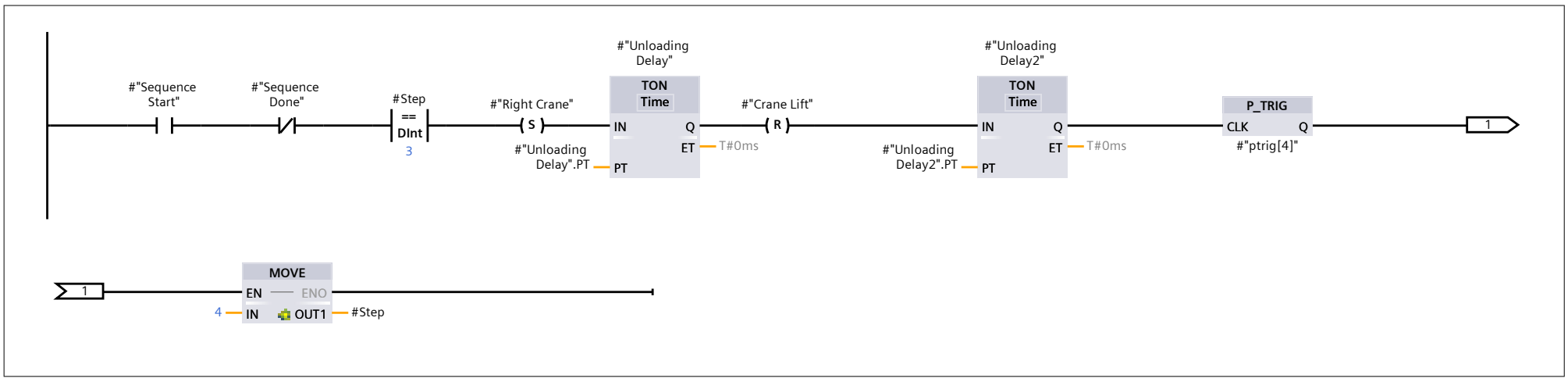

Network 6: Step 4 - Reset crane and go back to the original position

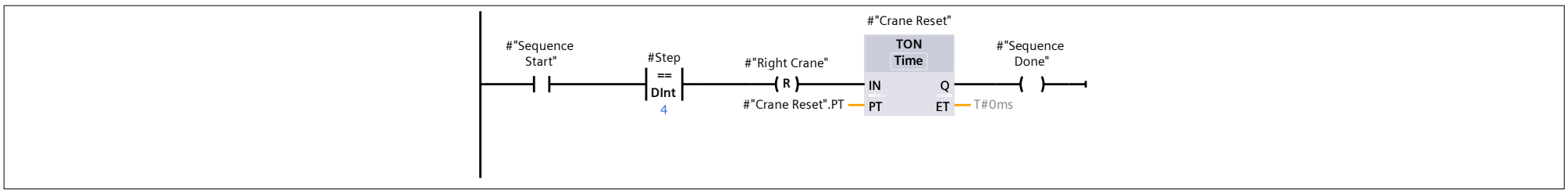

Network 7: DONE

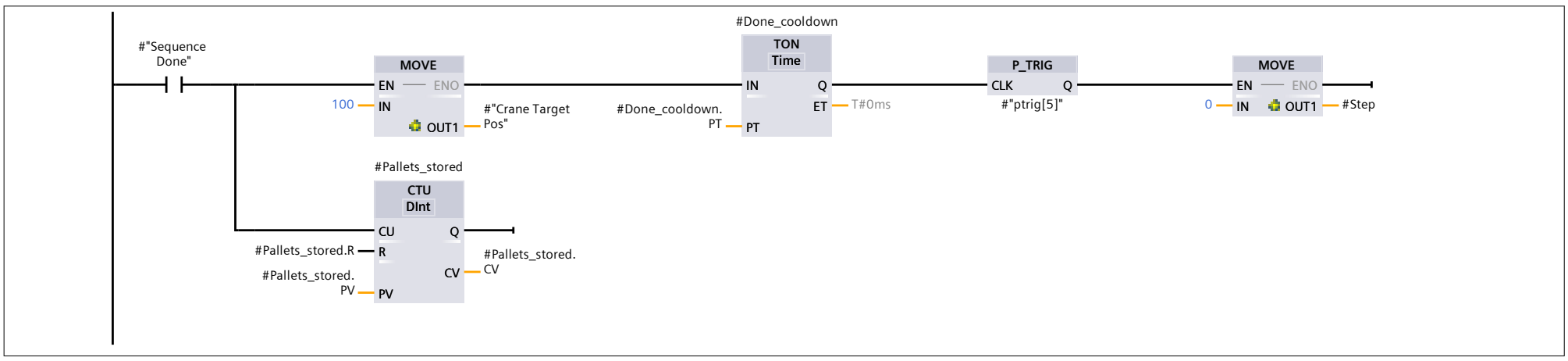

Network 8: Reset counter

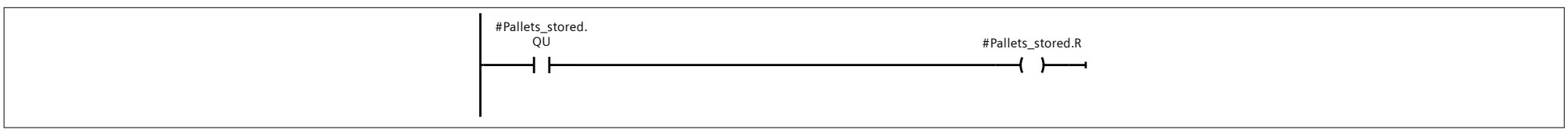

PLC_1 [CPU 1217C DC/DC/DC] / Program blocks

Pallet_load_DB [DB23]

Pallet_load_DB Properties							
General							
Name	Pallet_load_DB	**Number**	23	**Type**	DB	**Language**	DB
Numbering	Automatic						
Information							
Title		**Author**		**Comment**		**Family**	
Version	0.1	**User-defined ID**					

Name	Data type	Start value	Retain	Accessible from HMI/OPC UA/Web API	Writable from HMI/OPC UA/Web API	Visible in HMI engineering	Setpoint	Supervision	Comment
Input									
Loading Sensor	Bool	false	False	True	True	True	False		
Output									
Sequence Start	Bool	false	False	True	True	True	False		
Sequence Done	Bool	false	False	True	True	True	False		
FAULT	Bool	false	False	True	True	True	False		
Preloading Conveyor	Bool	false	False	True	True	True	False		
Loading Conveyor	Bool	false	False	True	True	True	False		
Left Crane	Bool	false	False	True	True	True	False		
Right Crane	Bool	false	False	True	True	True	False		
Crane Lift	Bool	false	False	True	True	True	False		
Crane Target Pos	DInt	0	False	True	True	True	False		
InOut									
Static									
Step	DInt	0	False	True	True	True	False		
Loading Sensor Delay	TON_TIME		False	True	True	True	False		
PT	Time	T#2s	False	True	True	True	False		
ET	Time	T#0ms	False	True	False	True	False		
IN	Bool	false	False	True	True	True	False		
Q	Bool	false	False	True	False	True	False		
Loading Delay	TOF_TIME		False	True	True	True	False		
PT	Time	T#1s	False	True	True	True	False		
ET	Time	T#0ms	False	True	False	True	False		
IN	Bool	false	False	True	True	True	False		
Q	Bool	false	False	True	False	True	False		
Unloading Delay	TON_TIME		False	True	True	True	True		
PT	Time	T#2s	False	True	True	True	False		
ET	Time	T#0ms	False	True	False	True	False		
IN	Bool	false	False	True	True	True	False		
Q	Bool	false	False	True	False	True	False		
Unloading Delay2	TON_TIME		False	True	True	True	True		
PT	Time	T#1s	False	True	True	True	False		
ET	Time	T#0ms	False	True	False	True	False		
IN	Bool	false	False	True	True	True	False		
Q	Bool	false	False	True	False	True	False		
Step 2 delay	TON_TIME		False	True	True	True	True		
PT	Time	T#1s	False	True	True	True	False		
ET	Time	T#0ms	False	True	False	True	False		
IN	Bool	false	False	True	True	True	False		
Q	Bool	false	False	True	False	True	False		
Step 2 Proc	TON_TIME		False	True	True	True	True		
PT	Time	T#8s	False	True	True	True	False		
ET	Time	T#0ms	False	True	False	True	False		
IN	Bool	false	False	True	True	True	False		
Q	Bool	false	False	True	False	True	False		
Crane Reset	TON_TIME		False	True	True	True	True		
PT	Time	T#2s	False	True	True	True	False		
ET	Time	T#0ms	False	True	False	True	False		
IN	Bool	false	False	True	True	True	False		
Q	Bool	false	False	True	False	True	False		
Done_cooldown	TON_TIME		False	True	True	True	True		
PT	Time	T#5s	False	True	True	True	False		
ET	Time	T#0ms	False	True	False	True	False		
IN	Bool	false	False	True	True	True	False		
Q	Bool	false	False	True	False	True	False		
Dynobit	DInt	0	False	True	True	True	True		
Pallets_stored	CTU_DINT		False	True	True	True	False		

Name	Data type	Start value	Retain	Accessible from HMI/OPC UA/Web API	Writ-able from HMI/ OPC UA/ Web API	Visible in HMI engi-neering	Setpoint	Supervi-sion	Comment
CU	Bool	false	False	True	True	True	False		
CD	Bool	false	False	True	True	True	False		
R	Bool	false	False	True	True	True	False		
LD	Bool	false	False	True	True	True	False		
QU	Bool	false	False	True	True	True	False		
QD	Bool	false	False	True	True	True	False		
PV	DInt	54	False	True	True	True	False		
CV	DInt	0	False	True	True	True	False		

PLC_1 [CPU 1217C DC/DC/DC] / Program blocks

Med_SM_load [DB24]

Med_SM_load Properties							
General							
Name	Med_SM_load	**Number**	24	**Type**	DB	**Language**	DB
Numbering	Automatic						
Information							
Title		**Author**		**Comment**		**Family**	
Version	0.1	**User-defined ID**					

Name	Data type	Start value	Retain	Accessible from HMI/OPC UA/Web API	Writable from HMI/OPC UA/Web API	Visible in HMI engineering	Setpoint	Supervision	Comment
Input									
Loading Sensor	Bool	false	False	True	True	True	False		
Output									
Sequence Start	Bool	false	False	True	True	True	False		
Sequence Done	Bool	false	False	True	True	True	False		
FAULT	Bool	false	False	True	True	True	False		
Preloading Conveyor	Bool	false	False	True	True	True	False		
Loading Conveyor	Bool	false	False	True	True	True	False		
Left Crane	Bool	false	False	True	True	True	False		
Right Crane	Bool	false	False	True	True	True	False		
Crane Lift	Bool	false	False	True	True	True	False		
Crane Target Pos	DInt	0	False	True	True	True	False		
InOut									
Static									
Step	DInt	0	False	True	True	True	False		
Loading Sensor Delay	TON_TIME		False	True	True	True	False		
PT	Time	T#2s	False	True	True	True	False		
ET	Time	T#0ms	False	True	False	True	False		
IN	Bool	false	False	True	True	True	False		
Q	Bool	false	False	True	False	True	False		
Loading Delay	TOF_TIME		False	True	True	True	False		
PT	Time	T#1s	False	True	True	True	False		
ET	Time	T#0ms	False	True	False	True	False		
IN	Bool	false	False	True	True	True	False		
Q	Bool	false	False	True	False	True	False		
Unloading Delay	TON_TIME		False	True	True	True	True		
PT	Time	T#2s	False	True	True	True	False		
ET	Time	T#0ms	False	True	False	True	False		
IN	Bool	false	False	True	True	True	False		
Q	Bool	false	False	True	False	True	False		
Unloading Delay2	TON_TIME		False	True	True	True	True		
PT	Time	T#1s	False	True	True	True	False		
ET	Time	T#0ms	False	True	False	True	False		
IN	Bool	false	False	True	True	True	False		
Q	Bool	false	False	True	False	True	False		
Step 2 delay	TON_TIME		False	True	True	True	True		
PT	Time	T#1s	False	True	True	True	False		
ET	Time	T#0ms	False	True	False	True	False		
IN	Bool	false	False	True	True	True	False		
Q	Bool	false	False	True	False	True	False		
Step 2 Proc	TON_TIME		False	True	True	True	True		
PT	Time	T#8s	False	True	True	True	False		
ET	Time	T#0ms	False	True	False	True	False		
IN	Bool	false	False	True	True	True	False		
Q	Bool	false	False	True	False	True	False		
Crane Reset	TON_TIME		False	True	True	True	True		
PT	Time	T#2s	False	True	True	True	False		
ET	Time	T#0ms	False	True	False	True	False		
IN	Bool	false	False	True	True	True	False		
Q	Bool	false	False	True	False	True	False		
Done_cooldown	TON_TIME		False	True	True	True	True		
PT	Time	T#5s	False	True	True	True	False		
ET	Time	T#0ms	False	True	False	True	False		
IN	Bool	false	False	True	True	True	False		
Q	Bool	false	False	True	False	True	False		
Dynobit	DInt	0	False	True	True	True	True		
Pallets_stored	CTU_DINT		False	True	True	True	False		

Name	Data type	Start value	Retain	Accessible from HMI/OPC UA/Web API	Writ-able from HMI/ OPC UA/ Web API	Visible in HMI engi-neering	Setpoint	Supervi-sion	Comment
CU	Bool	false	False	True	True	True	False		
CD	Bool	false	False	True	True	True	False		
R	Bool	false	False	True	True	True	False		
LD	Bool	false	False	True	True	True	False		
QU	Bool	false	False	True	True	True	False		
QD	Bool	false	False	True	True	True	False		
PV	DInt	54	False	True	True	True	False		
CV	DInt	0	False	True	True	True	False		

PLC_1 [CPU 1217C DC/DC/DC] / Program blocks / System blocks / Program resources

Item_timer [DB1]

Item_timer Properties							
General							
Name	Item_timer	**Number**	1	**Type**	DB	**Language**	DB
Numbering	Automatic						
Information							
Title		**Author**	Simatic	**Comment**		**Family**	IEC
Version	1.0	**User-defined ID**	IEC_TMR				

Name	Data type	Start value	Retain	Accessible from HMI/OPC UA/Web API	Writable from HMI/OPC UA/Web API	Visible in HMI engineering	Setpoint	Supervision	Comment
Static									
PT	Time	T#500MS	False	True	True	True	False		
ET	Time	T#0ms	False	True	False	True	False		
IN	Bool	false	False	True	True	True	False		
Q	Bool	false	False	True	False	True	False		

PLC_1 [CPU 1217C DC/DC/DC] / Program blocks / System blocks / Program resources

Count_Component [DB3]

Count_Component Properties							
General							
Name	Count_Component	**Number**	3	**Type**	DB	**Language**	DB
Numbering	Automatic						
Information							
Title		**Author**	Simatic	**Comment**		**Family**	IEC
Version	1.0	**User-defined ID**	CNTR				

Name	Data type	Start value	Retain	Accessible from HMI/OPC UA/Web API	Writ-able from HMI/ OPC UA/ Web API	Visible in HMI engi-neering	Setpoint	Supervi-sion				Comment
Static												
CU	Bool	false	True	True	True	True	False					
CD	Bool	false	True	True	True	True	False					
R	Bool	false	True	True	True	True	False					
LD	Bool	false	True	True	True	True	False					
QU	Bool	false	True	True	True	True	False					
QD	Bool	false	True	True	True	True	False					
PV	Int	3	True	True	True	True	False					
CV	Int	0	True	True	True	True	False					

PLC_1 [CPU 1217C DC/DC/DC] / Program blocks / System blocks / Program resources

Item_timer1 [DB2]

Item_timer1 Properties							
General							
Name	Item_timer1	**Number**	2	**Type**	DB	**Language**	DB
Numbering	Automatic						
Information							
Title		**Author**	Simatic	**Comment**		**Family**	IEC
Version	1.0	**User-defined ID**	IEC_TMR				

Name	Data type	Start value	Retain	Accessible from HMI/OPC UA/Web API	Writ-able from HMI/ OPC UA/ Web API	Visible in HMI engi-neering	Setpoint	Supervi-sion				Comment
Static												
PT	Time	T#3s	False	True	True	True	False					
ET	Time	T#0ms	False	True	False	True	False					
IN	Bool	false	False	True	True	True	False					
Q	Bool	false	False	True	False	True	False					

PLC_1 [CPU 1217C DC/DC/DC] / Program blocks / System blocks / Program resources

pnp delay [DB4]

pnp delay Properties							
General							
Name	pnp delay	**Number**	4	**Type**	DB	**Language**	DB
Numbering	Automatic						
Information							
Title		**Author**	Simatic	**Comment**		**Family**	IEC
Version	1.0	**User-defined ID**	IEC_TMR				

Name	Data type	Start value	Retain	Accessible from HMI/OPC UA/Web API	Writable from HMI/OPC UA/Web API	Visible in HMI engineering	Setpoint	Supervision	Comment
Static									
PT	Time	T#1s	False	True	True	True	False		
ET	Time	T#0ms	False	True	False	True	False		
IN	Bool	false	False	True	True	True	False		
Q	Bool	false	False	True	False	True	False		

PLC_1 [CPU 1217C DC/DC/DC] / Program blocks / System blocks / Program resources

pnp delay1 [DB5]

pnp delay1 Properties							
General							
Name	pnp delay1	**Number**	5	**Type**	DB	**Language**	DB
Numbering	Automatic						
Information							
Title		**Author**	Simatic	**Comment**		**Family**	IEC
Version	1.0	**User-defined ID**	IEC_TMR				

Name	Data type	Start value	Retain	Accessible from HMI/OPC UA/Web API	Writable from HMI/OPC UA/Web API	Visible in HMI engineering	Setpoint	Supervision	Comment
Static									
PT	Time	T#3s	False	True	True	True	False		
ET	Time	T#0ms	False	True	False	True	False		
IN	Bool	false	False	True	True	True	False		
Q	Bool	false	False	True	False	True	False		

PLC_1 [CPU 1217C DC/DC/DC] / Program blocks / System blocks / Program resources

pnp delay2 [DB6]

pnp delay2 Properties							
General							
Name	pnp delay2	**Number**	6	**Type**	DB	**Language**	DB
Numbering	Automatic						
Information							
Title		**Author**	Simatic	**Comment**		**Family**	IEC
Version	1.0	**User-defined ID**	IEC_TMR				

Name	Data type	Start value	Retain	Accessible from HMI/OPC UA/Web API	Writ-able from HMI/ OPC UA/ Web API	Visible in HMI engi-neering	Setpoint	Supervi-sion	Comment
Static									
PT	Time	T#1s	False	True	True	True	False		
ET	Time	T#0ms	False	True	False	True	False		
IN	Bool	false	False	True	True	True	False		
Q	Bool	false	False	True	False	True	False		

PLC_1 [CPU 1217C DC/DC/DC] / Program blocks / System blocks / Program resources

pnp delay3 [DB7]

pnp delay3 Properties							
General							
Name	pnp delay3	**Number**	7	**Type**	DB	**Language**	DB
Numbering	Automatic						
Information							
Title		**Author**	Simatic	**Comment**		**Family**	IEC
Version	1.0	**User-defined ID**	IEC_TMR				

Name	Data type	Start value	Retain	Accessible from HMI/OPC UA/Web API	Writ-able from HMI/ OPC UA/ Web API	Visible in HMI engi-neering	Setpoint	Supervi-sion				Comment
Static												
PT	Time	T#2s	False	True	True	True	False					
ET	Time	T#0ms	False	True	False	True	False					
IN	Bool	false	False	True	True	True	False					
Q	Bool	false	False	True	False	True	False					

PLC_1 [CPU 1217C DC/DC/DC] / Program blocks / System blocks / Program resources

pnp delay4 [DB8]

pnp delay4 Properties							
General							
Name	pnp delay4	**Number**	8	**Type**	DB	**Language**	DB
Numbering	Automatic						
Information							
Title		**Author**	Simatic	**Comment**		**Family**	IEC
Version	1.0	**User-defined ID**	IEC_TMR				

Name	Data type	Start value	Retain	Accessible from HMI/OPC UA/Web API	Writable from HMI/OPC UA/Web API	Visible in HMI engineering	Setpoint	Supervision	Comment
Static									
PT	Time	T#1s	False	True	True	True	False		
ET	Time	T#0ms	False	True	False	True	False		
IN	Bool	false	False	True	True	True	False		
Q	Bool	false	False	True	False	True	False		

PLC_1 [CPU 1217C DC/DC/DC] / Program blocks / System blocks / Program resources

pnp delay5 [DB9]

pnp delay5 Properties							
General							
Name	pnp delay5	**Number**	9	**Type**	DB	**Language**	DB
Numbering	Automatic						
Information							
Title		**Author**	Simatic	**Comment**		**Family**	IEC
Version	1.0	**User-defined ID**	IEC_TMR				

Name	Data type	Start value	Retain	Accessible from HMI/OPC UA/Web API	Writable from HMI/OPC UA/Web API	Visible in HMI engineering	Setpoint	Supervision	Comment
Static									
PT	Time	T#2s	False	True	True	True	False		
ET	Time	T#0ms	False	True	False	True	False		
IN	Bool	false	False	True	True	True	False		
Q	Bool	false	False	True	False	True	False		

PLC_1 [CPU 1217C DC/DC/DC] / Program blocks / System blocks / Program resources

Arm delay [DB11]

Arm delay Properties							
General							
Name	Arm delay	**Number**	11	**Type**	DB	**Language**	DB
Numbering	Automatic						
Information							
Title		**Author**	Simatic	**Comment**		**Family**	IEC
Version	1.0	**User-defined ID**	IEC_TMR				

Name	Data type	Start value	Retain	Accessible from HMI/OPC UA/Web API	Writable from HMI/OPC UA/Web API	Visible in HMI engineering	Setpoint	Supervision	Comment
Static									
PT	Time	T#2s	False	True	True	True	False		
ET	Time	T#0ms	False	True	False	True	False		
IN	Bool	false	False	True	True	True	False		
Q	Bool	false	False	True	False	True	False		

PLC_1 [CPU 1217C DC/DC/DC] / Program blocks / System blocks / Program resources

Assem delay [DB12]

Assem delay Properties							
General							
Name	Assem delay	**Number**	12	**Type**	DB	**Language**	DB
Numbering	Automatic						
Information							
Title		**Author**	Simatic	**Comment**		**Family**	IEC
Version	1.0	**User-defined ID**	IEC_TMR				

Name	Data type	Start value	Retain	Accessible from HMI/OPC UA/Web API	Writable from HMI/OPC UA/Web API	Visible in HMI engineering	Setpoint	Supervision	Comment
Static									
PT	Time	T#1s	False	True	True	True	False		
ET	Time	T#0ms	False	True	False	True	False		
IN	Bool	false	False	True	True	True	False		
Q	Bool	false	False	True	False	True	False		

PLC_1 [CPU 1217C DC/DC/DC] / Program blocks / System blocks / Program resources

Assem delay1 [DB13]

Assem delay1 Properties							
General							
Name	Assem delay1	**Number**	13	**Type**	DB	**Language**	DB
Numbering	Automatic						
Information							
Title		**Author**	Simatic	**Comment**		**Family**	IEC
Version	1.0	**User-defined ID**	IEC_TMR				

Name	Data type	Start value	Retain	Accessible from HMI/OPC UA/Web API	Writable from HMI/OPC UA/Web API	Visible in HMI engineering	Setpoint	Supervision				Comment
Static												
PT	Time	T#2s	False	True	True	True	False					
ET	Time	T#0ms	False	True	False	True	False					
IN	Bool	false	False	True	True	True	False					
Q	Bool	false	False	True	False	True	False					

PLC_1 [CPU 1217C DC/DC/DC] / Program blocks / System blocks / Program resources

Assem delay2 [DB14]

Assem delay2 Properties							
General							
Name	Assem delay2	**Number**	14	**Type**	DB	**Language**	DB
Numbering	Automatic						
Information							
Title		**Author**	Simatic	**Comment**		**Family**	IEC
Version	1.0	**User-defined ID**	IEC_TMR				

Name	Data type	Start value	Retain	Accessible from HMI/OPC UA/Web API	Writable from HMI/OPC UA/Web API	Visible in HMI engineering	Setpoint	Supervision	Comment
Static									
PT	Time	T#3s	False	True	True	True	False		
ET	Time	T#0ms	False	True	False	True	False		
IN	Bool	false	False	True	True	True	False		
Q	Bool	false	False	True	False	True	False		

PLC_1 [CPU 1217C DC/DC/DC] / Program blocks / System blocks / Program resources

Assem delay3 [DB15]

Assem delay3 Properties							
General							
Name	Assem delay3	**Number**	15	**Type**	DB	**Language**	DB
Numbering	Automatic						
Information							
Title		**Author**	Simatic	**Comment**		**Family**	IEC
Version	1.0	**User-defined ID**	IEC_TMR				

Name	Data type	Start value	Retain	Accessible from HMI/OPC UA/Web API	Writable from HMI/OPC UA/Web API	Visible in HMI engineering	Setpoint	Supervision	Comment
Static									
PT	Time	T#4s	False	True	True	True	False		
ET	Time	T#0ms	False	True	False	True	False		
IN	Bool	false	False	True	True	True	False		
Q	Bool	false	False	True	False	True	False		

PLC_1 [CPU 1217C DC/DC/DC] / Program blocks / System blocks / Program resources

Assem delay4 [DB16]

Assem delay4 Properties							
General							
Name	Assem delay4	**Number**	16	**Type**	DB	**Language**	DB
Numbering	Automatic						
Information							
Title		**Author**	Simatic	**Comment**		**Family**	IEC
Version	1.0	**User-defined ID**	IEC_TMR				

Name	Data type	Start value	Retain	Accessible from HMI/OPC UA/Web API	Writable from HMI/OPC UA/Web API	Visible in HMI engineering	Setpoint	Supervision	Comment
Static									
PT	Time	T#5s	False	True	True	True	False		
ET	Time	T#0ms	False	True	False	True	False		
IN	Bool	false	False	True	True	True	False		
Q	Bool	false	False	True	False	True	False		

PLC_1 [CPU 1217C DC/DC/DC] / Program blocks / System blocks / Program resources

Assem delay5 [DB17]

Assem delay5 Properties							
General							
Name	Assem delay5	**Number**	17	**Type**	DB	**Language**	DB
Numbering	Automatic						
Information							
Title		**Author**	Simatic	**Comment**		**Family**	IEC
Version	1.0	**User-defined ID**	IEC_TMR				

Name	Data type	Start value	Retain	Accessible from HMI/OPC UA/Web API	Writable from HMI/OPC UA/Web API	Visible in HMI engineering	Setpoint	Supervision	Comment
Static									
PT	Time	T#6s	False	True	True	True	False		
ET	Time	T#0ms	False	True	False	True	False		
IN	Bool	false	False	True	True	True	False		
Q	Bool	false	False	True	False	True	False		

PLC_1 [CPU 1217C DC/DC/DC] / Program blocks / System blocks / Program resources

Assem delay6 [DB18]

Assem delay6 Properties							
General							
Name	Assem delay6	**Number**	18	**Type**	DB	**Language**	DB
Numbering	Automatic						
Information							
Title		**Author**	Simatic	**Comment**		**Family**	IEC
Version	1.0	**User-defined ID**	IEC_TMR				

Name	Data type	Start value	Retain	Accessible from HMI/OPC UA/Web API	Writable from HMI/OPC UA/Web API	Visible in HMI engineering	Setpoint	Supervision	Comment
Static									
PT	Time	T#7s	False	True	True	True	False		
ET	Time	T#0ms	False	True	False	True	False		
IN	Bool	false	False	True	True	True	False		
Q	Bool	false	False	True	False	True	False		

PLC_1 [CPU 1217C DC/DC/DC] / Program blocks / System blocks / Program resources

Assem delay7 [DB19]

Assem delay7 Properties							
General							
Name	Assem delay7	**Number**	19	**Type**	DB	**Language**	DB
Numbering	Automatic						
Information							
Title		**Author**	Simatic	**Comment**		**Family**	IEC
Version	1.0	**User-defined ID**	IEC_TMR				

Name	Data type	Start value	Retain	Accessible from HMI/OPC UA/Web API	Writable from HMI/OPC UA/Web API	Visible in HMI engineering	Setpoint	Supervision	Comment
Static									
PT	Time	T#8s	False	True	True	True	False		
ET	Time	T#0ms	False	True	False	True	False		
IN	Bool	false	False	True	True	True	False		
Q	Bool	false	False	True	False	True	False		

PLC_1 [CPU 1217C DC/DC/DC] / Program blocks / System blocks / Program resources

Conveyor Scale Delay [DB20]

Conveyor Scale Delay Properties							
General							
Name	Conveyor Scale Delay	**Number**	20	**Type**	DB	**Language**	DB
Numbering	Automatic						
Information							
Title		**Author**	Simatic	**Comment**		**Family**	IEC
Version	1.0	**User-defined ID**	IEC_TMR				

Name	Data type	Start value	Retain	Accessible from HMI/OPC UA/Web API	Writable from HMI/OPC UA/Web API	Visible in HMI engineering	Setpoint	Supervision	Comment
Static									
PT	Time	T#2.5s	False	True	True	True	False		
ET	Time	T#0ms	False	True	False	True	False		
IN	Bool	false	False	True	True	True	False		
Q	Bool	false	False	True	False	True	False		

PLC_1 [CPU 1217C DC/DC/DC] / Program blocks / System blocks / Program resources

Roller reset delay [DB22]

Roller reset delay Properties							
General							
Name	Roller reset delay	**Number**	22	**Type**	DB	**Language**	DB
Numbering	Automatic						
Information							
Title		**Author**	Simatic	**Comment**		**Family**	IEC
Version	1.0	**User-defined ID**	IEC_TMR				

Name	Data type	Start value	Retain	Accessible from HMI/OPC UA/Web API	Writable from HMI/OPC UA/Web API	Visible in HMI engineering	Setpoint	Supervision	Comment
Static									
PT	Time	T#12s	False	True	True	True	False		
ET	Time	T#0ms	False	True	False	True	False		
IN	Bool	false	False	True	True	True	False		
Q	Bool	false	False	True	False	True	False		

PLC_1 [CPU 1217C DC/DC/DC] / Program blocks / System blocks / Program resources

BaseLid Delay1 [DB26]

BaseLid Delay1 Properties							
General							
Name	BaseLid Delay1	**Number**	26	**Type**	DB	**Language**	DB
Numbering	Automatic						
Information							
Title		**Author**	Simatic	**Comment**		**Family**	IEC
Version	1.0	**User-defined ID**	IEC_TMR				

Name	Data type	Start value	Retain	Accessible from HMI/OPC UA/Web API	Writable from HMI/OPC UA/Web API	Visible in HMI engineering	Setpoint	Supervision	Comment
Static									
PT	Time	T#500ms	False	True	True	True	False		
ET	Time	T#0ms	False	True	False	True	False		
IN	Bool	false	False	True	True	True	False		
Q	Bool	false	False	True	False	True	False		

PLC_1 [CPU 1217C DC/DC/DC] / Program blocks / System blocks / Program resources

BaseLid Delay2 [DB27]

BaseLid Delay2 Properties							
General							
Name	BaseLid Delay2	**Number**	27	**Type**	DB	**Language**	DB
Numbering	Automatic						
Information							
Title		**Author**	Simatic	**Comment**		**Family**	IEC
Version	1.0	**User-defined ID**	IEC_TMR				

Name	Data type	Start value	Retain	Accessible from HMI/OPC UA/Web API	Writable from HMI/OPC UA/Web API	Visible in HMI engineering	Setpoint	Supervision	Comment
Static									
PT	Time	T#500ms	False	True	True	True	False		
ET	Time	T#0ms	False	True	False	True	False		
IN	Bool	false	False	True	True	True	False		
Q	Bool	false	False	True	False	True	False		

PLC_1 [CPU 1217C DC/DC/DC]

Technology objects

This folder is empty.

PLC_1 [CPU 1217C DC/DC/DC] / PLC tags / Global-Variable [41]

PLC tags

PLC tags												
	Name	Data type	Address	Retain	Accessible from HMI/OPC UA/Web API	Writable from HMI/OPC UA/Web API	Visible in HMI engineering	Supervision				Comment
	Pallet Counter RESET	Bool	%I3.0	False	True	True	True					Pallet Counter reset button
	Supply-Storage Enable	Bool	%I3.2	False	True	True	True					Supply Storage line enabler
	Part Assem Trans EN	Bool	%I3.1	False	True	True	True					Part assembly transfer enabler

PLC_1 [CPU 1217C DC/DC/DC] / PLC tags / Global-Variable [41]

User constants

User constants				
	Name	Data type	Value	Comment

PLC_1 [CPU 1217C DC/DC/DC] / PLC tags / Component Assembly [10]

PLC tags

PLC tags

	Name	Data type	Address	Retain	Accessible from HMI/OPC UA/Web API	Writable from HMI/OPC UA/Web API	Visible in HMI engineering	Supervision				Comment
	Station 1	Bool	%I0.4	False	True	True	True					Sensor that disables pusher if filled
	Pusher trigger	Bool	%I0.5	False	True	True	True					Pusher Sensor trigger
	Pusher	Bool	%Q0.3	False	True	True	True					Pusher Actuator
	Arm	Bool	%Q0.7	False	True	True	True					Pivot Arm Sorter
	Vision Sensor	Bool	%I0.6	False	True	True	True					Sense parts
	Lid Sensor	Bool	%I0.7	False	True	True	True					Lid laser sensor
	Base sensor	Bool	%I1.0	False	True	True	True					Base laser sensor
	Lid Clamp(H)	Bool	%Q1.2	False	True	True	True					Lid Clamp Horizontal
	Base Clamp(H)	Bool	%Q1.1	False	True	True	True					Base Clamp Horizontal
	Base Clamp(V)	Bool	%Q1.0	False	True	True	True					Base Clamp Vertical

PLC_1 [CPU 1217C DC/DC/DC] / PLC tags / Component Assembly [10]

User constants

User constants				
	Name	Data type	Value	Comment

PLC_1 [CPU 1217C DC/DC/DC] / PLC tags / Item-Transfer-Package [9]

PLC tags

PLC tags

	Name	Data type	Address	Retain	Accessible from HMI/OPC UA/Web API	Writable from HMI/OPC UA/Web API	Visible in HMI engineering	Supervision				Comment
	Transfer Sensor	Bool	%I0.0	False	True	True	True					Item packaging Sensor
	Transfer Conveyor	Bool	%Q0.1	False	True	True	True					Cart Conveyor belt stopper
	Redirect Sensor	Bool	%I0.1	False	True	True	True					Cart redirection
	Redirect Actuator	Bool	%Q0.0	False	True	True	True					Redirect chain
	Component Sensor	Bool	%I0.2	False	True	True	True					Component transfer sensor
	Conveyor Roller	Bool	%Q0.2	False	True	True	True					Conveyor Roller
	Cart Detector	Bool	%I0.3	False	True	True	True					Cart detector for component collection
	Conveyor PnP	Bool	%Q1.6	False	True	True	True					Digital pnp assembled component
	Digital pnp conveyor	Bool	%Q6.5	False	True	True	True					Component Conveyor Pre-transfer

PLC_1 [CPU 1217C DC/DC/DC] / PLC tags / Item-Transfer-Package [9]

User constants

User constants				
	Name	Data type	Value	Comment

PLC_1 [CPU 1217C DC/DC/DC] / PLC tags / Pallet_load [8]

PLC tags

PLC tags

	Name	Data type	Address	Retain	Accessible from HMI/OPC UA/Web API	Writable from HMI/OPC UA/Web API	Visible in HMI engineering	Supervision				Comment
	Pallet Loading conveyor	Bool	%Q5.3	False	True	True	True					Skid loading conveyor
	Pallet Loading sensor	Bool	%I2.0	False	True	True	True					Skid loading sensor
	Pallet right crane	Bool	%Q5.4	False	True	True	True					Right actuator
	Pallet left crane	Bool	%Q5.5	False	True	True	True					Left actuator
	Pallet Preloading conveyor	Bool	%Q5.6	False	True	True	True					Conveyor at the back
	Pallet Crane Target Position	DInt	%QD60	False	True	True	True					From 0-54
	Pallet Crane lift	Bool	%Q5.7	False	True	True	True					Crane lift actuator
	Crane Enabler	Bool	%I2.7	False	True	True	True					Enables the Crane

PLC_1 [CPU 1217C DC/DC/DC] / PLC tags / Pallet_load [8]

User constants

User constants				
	Name	Data type	Value	Comment

PLC_1 [CPU 1217C DC/DC/DC] / PLC tags / Palletizer [12]

PLC tags

PLC tags

	Name	Data type	Address	Retain	Accessible from HMI/OPC UA/Web API	Writable from HMI/OPC UA/Web API	Visible in HMI engineering	Supervision				Comment
	Pallet Push	Bool	%Q4.1	False	True	True	True					Pallet pusher
	Pallet Turn	Bool	%Q4.2	False	True	True	True					Pallet lever(turning)
	Pallet Clamp	Bool	%Q4.3	False	True	True	True					Pallet clamper
	Pallet Chain	Bool	%Q4.4	False	True	True	True					Chain Belt(skid location)
	Pallet Elevator(+)	Bool	%Q4.5	False	True	True	True					Elevates up
	Pallet Elevator(-)	Bool	%Q4.6	False	True	True	True					Elevates down
	Elevator MOV Limit	Bool	%Q4.7	False	True	True	True					Go to the direction's maxmium limit
	Pallet sensor (front)	Bool	%I2.2	False	True	True	True					Pallet front cap sensor
	Pallet Open	Bool	%Q5.0	False	True	True	True					Pallet door
	Pallet Conveyor 1	Bool	%Q5.1	False	True	True	True					Skid preloading conveyor belt
	Pallet Belt +	Bool	%Q5.2	False	True	True	True					Pallet conveyor belt
	Pallet Box Sensor2	Bool	%I2.4	False	True	True	True					Pallet Box sensor

PLC_1 [CPU 1217C DC/DC/DC] / PLC tags / Palletizer [12]

User constants

User constants				
	Name	Data type	Value	Comment

PLC_1 [CPU 1217C DC/DC/DC] / PLC tags / Pick and place 2-axis [6]

PLC tags

PLC tags

	Name	Data type	Address	Retain	Accessible from HMI/OPC UA/Web API	Writable from HMI/OPC UA/Web API	Visible in HMI engineering	Supervision				Comment
	Place X 1	Bool	%Q0.4	False	True	True	True					Assemble component transfer
	Place Z 1	Bool	%Q0.5	False	True	True	True					Assemble component transfer
	Grab 1	Bool	%Q0.6	False	True	True	True					Assemble component transfer
	Place X 0	Bool	%Q1.3	False	True	True	True					Component Assembly
	Place Z 0	Bool	%Q1.4	False	True	True	True					Component Assembly
	Grab 0	Bool	%Q1.5	False	True	True	True					Component Assembly

PLC_1 [CPU 1217C DC/DC/DC] / PLC tags / Pick and place 2-axis [6]

User constants

User constants				
	Name	Data type	Value	Comment

PLC_1 [CPU 1217C DC/DC/DC] / PLC tags / Supply Storage [52]

PLC tags

PLC tags

	Name	Data type	Address	Retain	Accessible from HMI/OPC UA/Web API	Writable from HMI/OPC UA/Web API	Visible in HMI engineering	Supervision				Comment
	Box Weight	Real	%ID32	False	True	True	True					Converyor Weight sensor (float)
	Box Arm	Bool	%Q1.7	False	True	True	True					Box Arm sorter
	STOP	Bool	%I1.1	False	True	True	True					Weight Scale Stop
	Box stopper	Bool	%Q2.0	False	True	True	True					Box stopper
	Conveyor Scale	Bool	%Q2.1	False	True	True	True					Conveyor weight scale sensor
	DONE	Bool	%M6.2	False	True	True	True					Weighting done
	Pallet Sensor 2	Bool	%I1.2	False	True	True	True					pnp skid limit sensor 1
	Roller 1	Bool	%Q2.2	False	True	True	True					Stops Pallet for PnP Station 1
	Roller 2	Bool	%Q2.3	False	True	True	True					Stops Pallet for PnP Station 2
	Pallet Conveyor	Bool	%Q2.4	False	True	True	True					Skid conveyor
	Pallet Sensor 1	Bool	%I1.3	False	True	True	True					pnp skid limit sensor 2
	Box Sensor 1	Bool	%I1.4	False	True	True	True					MED box sensor
	Box Sensor 2	Bool	%I1.5	False	True	True	True					SM box sensor
	Box Light 1 (Fault) - R	Bool	%Q2.7	False	True	True	True					Red 1
	Box Light 1 (Proc) - Y	Bool	%Q2.6	False	True	True	True					Yellow 1
	Box Light 1 (Idle) - G	Bool	%Q2.5	False	True	True	True					Green 1
	X_1	Real	%ID36	False	True	True	True					PnP X dir sensor 1
	Y_1	Real	%ID40	False	True	True	True					PnP Y dir sensor 1
	Z_1	Real	%ID44	False	True	True	True					PnP Z dir sensor 1
	Detected_1	Bool	%I1.6	False	True	True	True					Grip detection sensor 1
	C+_1	Bool	%Q3.1	False	True	True	True					Grip rotate actuator 1
	Box Grab_1	Bool	%Q3.0	False	True	True	True					Gripper 1
	SP Y_1	Real	%QD40	False	True	True	True					Setpoint Y dir 1
	SP Z_1	Real	%QD44	False	True	True	True					Setpoint Z dir 1
	RESET_1	Bool	%I3.3	False	True	True	True					RESET pnp 1
	PnP DONE_1	Bool	%M6.0	False	True	True	True					pnp 1 sequence done
	PnP DONE_2	Bool	%M6.1	False	True	True	True					pnp 2 sequence done
	Med pnp belt	Bool	%Q3.2	False	True	True	True					Converyor (medium pallets)
	Sm pnp belt	Bool	%Q3.3	False	True	True	True					Converyor (small pallets)
	Box Light 2 (Fault) - R	Bool	%Q3.4	False	True	True	True					Red 2
	Box Light 2 (Proc) - Y	Bool	%Q3.5	False	True	True	True					Yellow 2
	Box Light 2 (Idle) - G	Bool	%Q3.6	False	True	True	True					Green 2
	Box Grab_2	Bool	%Q3.7	False	True	True	True					Gripper 2
	C+_2	Bool	%Q4.0	False	True	True	True					Grip rotate actuator 2
	SP X_2	Real	%QD48	False	True	True	True					Setpoint X dir 2
	SP Y_2	Real	%QD52	False	True	True	True					Setpoint Y dir 2
	SP Z_2	Real	%QD56	False	True	True	True					Setpoint Z dir 2
	X_2	Real	%ID48	False	True	True	True					PnP X dir sensor 2
	Y_2	Real	%ID52	False	True	True	True					PnP Y dir sensor 2
	Z_2	Real	%ID56	False	True	True	True					PnP Z dir sensor 2
	Detected_2	Bool	%I1.7	False	True	True	True					Grip item detection sensor 2
	RESET_2	Bool	%I3.4	False	True	True	True					RESET pnp 2
	SP X_1	Real	%QD36	False	True	True	True					Setpoint X dir 1
	Roller_reset	Bool	%I2.5	False	True	True	True					Roller stopper reset(skid)
	BoxStopper_reset	Bool	%I2.6	False	True	True	True					Roller stopper reset(box)
	MEDSM_Load Sensor	Bool	%I2.1	False	True	True	True					Stacked box loading sensor
	Box loading Conveyor	Bool	%Q6.0	False	True	True	True					Stacked box loading Conveyor
	Box right crane	Bool	%Q6.1	False	True	True	True					Box crane right actuator
	Box left crane	Bool	%Q6.2	False	True	True	True					Box crane left actuator
	Box Crane Lift	Bool	%Q6.3	False	True	True	True					Box crane lift actuator
	Box target Position	DInt	%QD32	False	True	True	True					Box crane Position actuator
	Box Preloading Conveyor	Bool	%Q6.4	False	True	True	True					Box preloading conveyor belt

PLC_1 [CPU 1217C DC/DC/DC] / PLC tags / Supply Storage [52]

User constants

User constants				
	Name	Data type	Value	Comment

PLC_1 [CPU 1217C DC/DC/DC] / PLC data types

System data types

This folder is empty.

PLC_1 [CPU 1217C DC/DC/DC] / Watch and force tables

Forcetabelle

Name	Address	Display format	Force value	Comment

PLC_1 [CPU 1217C DC/DC/DC]

Traces

Name
Analog pnp
Sensor Hiccups

PLC_1 [CPU 1217C DC/DC/DC] / Traces / Measurements

Analog pnp

Signals				
Name	**Data type**	**Address**	**Unit**	**Comment**
"SP X_2"	Real	%QD48		
"SP Y_2"	Real	%QD52		
"SP Z_2"	Real	%QD56		
"SP X_1"	Real	%QD36		
"SP Y_1"	Real	%QD40		
"SP Z_1"	Real	%QD44		
"Box Weight"	Real	%ID32		

Snapshots		
Name	**Time stamp**	**Comment**

PLC_1 [CPU 1217C DC/DC/DC] / Traces / Measurements

Sensor Hiccups

Signals				
Name	**Data type**	**Address**	**Unit**	**Comment**
"Pallet sensor (front)"	Bool	%I2.2		Pallet sensor
"Pallet Loading sensor"	Bool	%I2.0		Stacked Pallet loading sensor
"MEDSM_Load Sensor"	Bool	%I2.1		Stacked Box sensor
"Pallet Belt +"	Bool	%Q5.2		Pallet Sensor(filtered)

Snapshots		
Name	**Time stamp**	**Comment**

PLC_1 [CPU 1217C DC/DC/DC] / Traces / Measurements

Analog pnp_1

Signals				
Name	**Data type**	**Address**	**Unit**	**Comment**
"SP X_2"	Real	%QD48		
"SP Y_2"	Real	%QD52		
"SP Z_2"	Real	%QD56		
"SP X_1"	Real	%QD36		
"SP Y_1"	Real	%QD40		
"SP Z_1"	Real	%QD44		
"Box Weight"	Real	%ID32		

Snapshots		
Name	**Time stamp**	**Comment**

PLC_1 [CPU 1217C DC/DC/DC] / Traces

Combined measurements

Name

PLC_1 [CPU 1217C DC/DC/DC] / OPC UA communication

Server interfaces

This folder is empty.

PLC_1 [CPU 1217C DC/DC/DC]

PLC alarm text lists

This folder is empty.

PLC_1 [CPU 1217C DC/DC/DC] / Local modules

PLC_1 [CPU 1217C DC/DC/DC]

PLC_1					
General\Project information					
Name	PLC_1	**Author**	i72014	**Comment**	
Slot	1	**Rack**	0		
General\Catalog information					
Short designation	CPU 1217C DC/DC/DC	**Description**	Work memory 250 KB; 24VDC power supply with DI10 x 24VDC SINK/SOURCE, DI4 x RS422/485 Differential, DQ6 x 24VDC, DQ4 x RS422/485 Differential, AI2 and AQ2 on-board; 6 high-speed counters and 4 pulse outputs on-board; signal board expands on-board I/O; up to 3 communication modules for serial communication; up to 8 signal modules for I/O expansion; PROFINET IO controller, 2 ports, I-device, transport protocol TCP/IP, secure Open User Communication, S7 communication, Web server, OPC UA: Server DA	**Article number**	6ES7 217-1AG40-0XB0
Firmware version	V4.7				
General\Identification & Maintenance					
Plant designation		**Location identifier**		**Installation date**	2016-04-07 09:52:18.455
Additional information					
PROFINET interface [X1]\General					
Name	PROFINET-Schnittstelle_1	**Author**	i72014	**Comment**	
PROFINET interface [X1]\General\Project information					
Name	DI 14/DQ 10_1	**Comment**		**Name**	AI 2/AQ 2_1
Comment					
PROFINET interface [X1]\Ethernet addresses\Interface networked with					
Subnet:	PN/IE_1				
PROFINET interface [X1]\Ethernet addresses\Internet protocol version 4 (IPv4)					
IP configuration	Set IP address in the project	**IP address:**	192.168.0.1	**Subnet mask:**	255.255.255.0
Use router	False				
PROFINET interface [X1]\Ethernet addresses\PROFINET					
PROFINET device name is set directly at the device	False	**Generate PROFINET device name automatically**	True	**PROFINET device name:**	plc_1
Converted name:	plcxb1d0ed	**Device number:**	0		
PROFINET interface [X1]\Time-of-day synchronization					
Enable time synchronization via NTP server	Enable time synchronization via NTP server		IP addresses	**Server 1**	0.0.0.0
Server 2	0.0.0.0	**Server 3**	0.0.0.0	**Server 4**	0.0.0.0
Update interval	10sec			**CPU synchronizes the modules of the device.**	No synchronization
PROFINET interface [X1]\Digital inputs\Channel0					
Channel address	I0.0	**Input filters**	6.4 millisec	**Enable pulse catch**	0
PROFINET interface [X1]\Digital inputs\Channel0					
Enable rising edge detection	0	**Prefix Event Rising Edge**	49152	**Event name:**	0
Hardware interrupt:	0	**Rising edge0**	Rising edge0		
PROFINET interface [X1]\Digital inputs\Channel0					
Enable falling edge detection	0	**Prefix Event Falling Edge**	49280	**Event name:**	0
Hardware interrupt:	0	**Falling edge0**	Falling edge0		
PROFINET interface [X1]\Digital inputs\Channel1					
Channel address	I0.1	**Input filters**	6.4 millisec	**Enable pulse catch**	0
PROFINET interface [X1]\Digital inputs\Channel1					
Enable rising edge detection	0	**Prefix Event Rising Edge**	49153	**Event name:**	0
Hardware interrupt:	0	**Rising edge1**	Rising edge1		
PROFINET interface [X1]\Digital inputs\Channel1					
Enable falling edge detection	0	**Prefix Event Falling Edge**	49281	**Event name:**	0
Hardware interrupt:	0	**Falling edge1**	Falling edge1		
PROFINET interface [X1]\Digital inputs\Channel2					
Channel address	I0.2	**Input filters**	6.4 millisec	**Enable pulse catch**	0
PROFINET interface [X1]\Digital inputs\Channel2					
Enable rising edge detection	0	**Prefix Event Rising Edge**	49154	**Event name:**	0
Hardware interrupt:	0	**Rising edge2**	Rising edge2		
PROFINET interface [X1]\Digital inputs\Channel2					
Enable falling edge detection	0	**Prefix Event Falling Edge**	49282	**Event name:**	0
Hardware interrupt:	0	**Falling edge2**	Falling edge2		
PROFINET interface [X1]\Digital inputs\Channel3					
Channel address	I0.3	**Input filters**	6.4 millisec	**Enable pulse catch**	0
PROFINET interface [X1]\Digital inputs\Channel3					
Enable rising edge detection	0	**Prefix Event Rising Edge**	49155	**Event name:**	0
Hardware interrupt:	0	**Rising edge3**	Rising edge3		

PROFINET interface [X1]\Digital inputs\Channel3					
Enable falling edge detection	0	**Prefix Event Falling Edge**	49283	**Event name:**	0
Hardware interrupt:	0	**Falling edge3**	Falling edge3		
PROFINET interface [X1]\Digital inputs\Channel4					
Channel address	I0.4	**Input filters**	6.4 millisec	**Enable pulse catch**	0
PROFINET interface [X1]\Digital inputs\Channel4					
Enable rising edge detection	0	**Prefix Event Rising Edge**	49156	**Event name:**	0
Hardware interrupt:	0	**Rising edge4**	Rising edge4		
PROFINET interface [X1]\Digital inputs\Channel4					
Enable falling edge detection	0	**Prefix Event Falling Edge**	49284	**Event name:**	0
Hardware interrupt:	0	**Falling edge4**	Falling edge4		
PROFINET interface [X1]\Digital inputs\Channel5					
Channel address	I0.5	**Input filters**	6.4 millisec	**Enable pulse catch**	0
PROFINET interface [X1]\Digital inputs\Channel5					
Enable rising edge detection	0	**Prefix Event Rising Edge**	49157	**Event name:**	0
Hardware interrupt:	0	**Rising edge5**	Rising edge5		
PROFINET interface [X1]\Digital inputs\Channel5					
Enable falling edge detection	0	**Prefix Event Falling Edge**	49285	**Event name:**	0
Hardware interrupt:	0	**Falling edge5**	Falling edge5		
PROFINET interface [X1]\Digital inputs\Channel6					
Channel address	I0.6	**Input filters**	6.4 millisec	**Enable pulse catch**	0
PROFINET interface [X1]\Digital inputs\Channel6					
Enable rising edge detection	0	**Prefix Event Rising Edge**	49158	**Event name:**	0
Hardware interrupt:	0	**Rising edge6**	Rising edge6		
PROFINET interface [X1]\Digital inputs\Channel6					
Enable falling edge detection	0	**Prefix Event Falling Edge**	49286	**Event name:**	0
Hardware interrupt:	0	**Falling edge6**	Falling edge6		
PROFINET interface [X1]\Digital inputs\Channel7					
Channel address	I0.7	**Input filters**	6.4 millisec	**Enable pulse catch**	0
PROFINET interface [X1]\Digital inputs\Channel7					
Enable rising edge detection	0	**Prefix Event Rising Edge**	49159	**Event name:**	0
Hardware interrupt:	0	**Rising edge7**	Rising edge7		
PROFINET interface [X1]\Digital inputs\Channel7					
Enable falling edge detection	0	**Prefix Event Falling Edge**	49287	**Event name:**	0
Hardware interrupt:	0	**Falling edge7**	Falling edge7		
PROFINET interface [X1]\Digital inputs\Channel8					
Channel address	I1.0	**Input filters**	6.4 millisec	**Enable pulse catch**	0
PROFINET interface [X1]\Digital inputs\Channel8					
Enable rising edge detection	0	**Prefix Event Rising Edge**	49160	**Event name:**	0
Hardware interrupt:	0	**Rising edge8**	Rising edge8		
PROFINET interface [X1]\Digital inputs\Channel8					
Enable falling edge detection	0	**Prefix Event Falling Edge**	49288	**Event name:**	0
Hardware interrupt:	0	**Falling edge8**	Falling edge8		
PROFINET interface [X1]\Digital inputs\Channel9					
Channel address	I1.1	**Input filters**	6.4 millisec	**Enable pulse catch**	0
PROFINET interface [X1]\Digital inputs\Channel9					
Enable rising edge detection	0	**Prefix Event Rising Edge**	49161	**Event name:**	0
Hardware interrupt:	0	**Rising edge9**	Rising edge9		
PROFINET interface [X1]\Digital inputs\Channel9					
Enable falling edge detection	0	**Prefix Event Falling Edge**	49289	**Event name:**	0
Hardware interrupt:	0	**Falling edge9**	Falling edge9		
PROFINET interface [X1]\Digital inputs\Channel10					
Channel address	I1.2	**Input filters**	6.4 millisec	**Enable pulse catch**	0
PROFINET interface [X1]\Digital inputs\Channel10					
Enable rising edge detection	0	**Prefix Event Rising Edge**	49162	**Event name:**	0
Hardware interrupt:	0	**Rising edge10**	Rising edge10		
PROFINET interface [X1]\Digital inputs\Channel10					
Enable falling edge detection	0	**Prefix Event Falling Edge**	49290	**Event name:**	0
Hardware interrupt:	0	**Falling edge10**	Falling edge10		
PROFINET interface [X1]\Digital inputs\Channel11					
Channel address	I1.3	**Input filters**	6.4 millisec	**Enable pulse catch**	0
PROFINET interface [X1]\Digital inputs\Channel11					
Enable rising edge detection	0	**Prefix Event Rising Edge**	49163	**Event name:**	0
Hardware interrupt:	0	**Rising edge11**	Rising edge11		
PROFINET interface [X1]\Digital inputs\Channel11					
Enable falling edge detection	0	**Prefix Event Falling Edge**	49291	**Event name:**	0
Hardware interrupt:	0	**Falling edge11**	Falling edge11		
PROFINET interface [X1]\Digital inputs\Channel12					
Channel address	I1.4	**Input filters**	6.4 millisec	**Enable pulse catch**	0
PROFINET interface [X1]\Digital inputs\Channel13					
Channel address	I1.5	**Input filters**	6.4 millisec	**Enable pulse catch**	0

PROFINET interface [X1]\Analog inputs\Noise reduction					
Integration time	50 Hz (20 ms)				
PROFINET interface [X1]\Analog inputs\Channel0					
Channel address	IW64	**Measurement type**	Voltage	**Voltage range**	0..10 V
Smoothing	Weak (4 cycles)			**Enable overflow diagnostics**	1
PROFINET interface [X1]\Analog inputs\Channel1					
Channel address	IW66	**Measurement type**	Voltage	**Voltage range**	0..10 V
Smoothing	Weak (4 cycles)			**Enable overflow diagnostics**	1
PROFINET interface [X1]\Digital outputs					
Reaction to CPU STOP	Use substitute value				
PROFINET interface [X1]\Digital outputs\Channel0					
Channel address	Q0.0	**Substitute a value of 1 on a change from RUN to STOP.**	0		
PROFINET interface [X1]\Digital outputs\Channel1					
Channel address	Q0.1	**Substitute a value of 1 on a change from RUN to STOP.**	0		
PROFINET interface [X1]\Digital outputs\Channel2					
Channel address	Q0.2	**Substitute a value of 1 on a change from RUN to STOP.**	0		
PROFINET interface [X1]\Digital outputs\Channel3					
Channel address	Q0.3	**Substitute a value of 1 on a change from RUN to STOP.**	0		
PROFINET interface [X1]\Digital outputs\Channel4					
Channel address	Q0.4	**Substitute a value of 1 on a change from RUN to STOP.**	0		
PROFINET interface [X1]\Digital outputs\Channel5					
Channel address	Q0.5	**Substitute a value of 1 on a change from RUN to STOP.**	0		
PROFINET interface [X1]\Digital outputs\Channel6					
Channel address	Q0.6	**Substitute a value of 1 on a change from RUN to STOP.**	0		
PROFINET interface [X1]\Digital outputs\Channel7					
Channel address	Q0.7	**Substitute a value of 1 on a change from RUN to STOP.**	0		
PROFINET interface [X1]\Digital outputs\Channel8					
Channel address	Q1.0	**Substitute a value of 1 on a change from RUN to STOP.**	0		
PROFINET interface [X1]\Digital outputs\Channel9					
Channel address	Q1.1	**Substitute a value of 1 on a change from RUN to STOP.**	0		
PROFINET interface [X1]\Operating mode					
IO controller	True	**IO system**		**Device number**	0
IO device	False				
PROFINET interface [X1]\Analog outputs					
Reaction to CPU STOP	Use substitute value				
PROFINET interface [X1]\Analog outputs\Channel0					
Channel address	QW64	**Analog output type**	Current	**Current range**	0..20 mA
Substitute value for channel on a change from RUN to STOP	0.000mA			**Enable overflow diagnostics**	1
Enable underflow diagnostics	1				
PROFINET interface [X1]\Analog outputs\Channel1					
Channel address	QW66	**Analog output type**	Current	**Current range**	0..20 mA
Substitute value for channel on a change from RUN to STOP	0.000mA			**Enable overflow diagnostics**	1
Enable underflow diagnostics	1				
PROFINET interface [X1]\I/O addresses\Input addresses					
Start address	0.0	**End address**	1.7	**Organization block**	65535
Process image	65535				
PROFINET interface [X1]\I/O addresses\Input addresses					
Start address	64	**End address**	67	**Organization block**	0
Process image	0				
PROFINET interface [X1]\I/O addresses\Output addresses					
Start address	0.0	**End address**	1.7	**Organization block**	0
Process image	0				
PROFINET interface [X1]\I/O addresses\Output addresses					
Start address	64	**End address**	67	**Organization block**	0
Process image	0				
PROFINET interface [X1]\Advanced options\Interface options					
Support device replacement without exchangeable medium	True	**Permit overwriting of device names of all assigned IO devices**	False	**Use IEC V2.2 LLDP mode**	False
Keep-Alive connection monitoring:	30s				

PROFINET interface [X1]\Advanced options\Media redundancy					
MRP domain	mrpdomain-1	**Media redundancy role:**	Not device in the ring		
PROFINET interface [X1]\Advanced options\Real time settings\IO communication					
Send clock:	1.000ms				
PROFINET interface [X1]\Advanced options\Real time settings\Real time options					
Calculated bandwidth for cyclic IO data:	0.000ms	**Calculated bandwidth for cyclic IO data:**	0.000%		
PROFINET interface [X1]\Advanced options\Port [X1 P1]\General					
Name	Port_1	**Author**	i72014	**Comment**	
PROFINET interface [X1]\Advanced options\Port [X1 P1]\Port interconnection\Local port:					
Local port:	PLC_1\PROFINET-Schnittstelle_1 [X1]\Port_1 [X1 P1R]	**Medium:**	Copper	**Cable name:**	---
		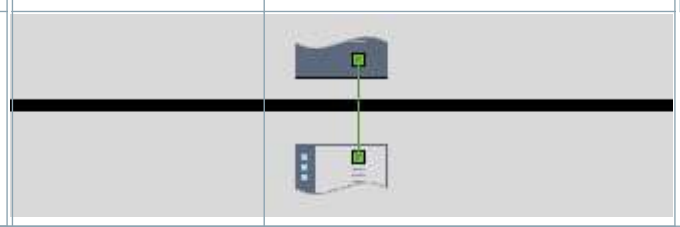			
PROFINET interface [X1]\Advanced options\Port [X1 P1]\Port interconnection\Partner port:					
	Monitoring of partner port is not possible	**Partner port:**	Any partner		
PROFINET interface [X1]\Advanced options\Port [X1 P1]\Port options\Activate					
Activate this port for use	True				
PROFINET interface [X1]\Advanced options\Port [X1 P1]\Port options\Connection					
Transmission rate / duplex:	Automatic	**Monitor**	False	**Enable autonegotiation**	True
PROFINET interface [X1]\Advanced options\Port [X1 P1]\Port options\Boundaries					
End of detection of accessible devices	False	**End of topology discovery**	False	**End of the sync domain**	False
PROFINET interface [X1]\Advanced options\Port [X1 P2]\General					
Name	Port_2	**Author**	helpf	**Comment**	
PROFINET interface [X1]\Advanced options\Port [X1 P2]\Port interconnection\Local port:					
Local port:	PLC_1\PROFINET-Schnittstelle_1 [X1]\Port_2 [X1 P2R]	**Medium:**	Copper	**Cable name:**	---
		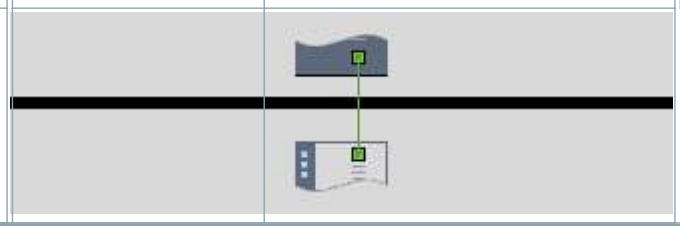			
PROFINET interface [X1]\Advanced options\Port [X1 P2]\Port interconnection\Partner port:					
	Monitoring of partner port is not possible	**Partner port:**	Any partner		
PROFINET interface [X1]\Advanced options\Port [X1 P2]\Port options\Activate					
Activate this port for use	True				
PROFINET interface [X1]\Advanced options\Port [X1 P2]\Port options\Connection					
Transmission rate / duplex:	Automatic	**Monitor**	False	**Enable autonegotiation**	True
PROFINET interface [X1]\Advanced options\Port [X1 P2]\Port options\Boundaries					
End of detection of accessible devices	False	**End of topology discovery**	False	**End of the sync domain**	False
PROFINET interface [X1]\Web server access					
Enable Web server for the IP address of this interface	False	**The Web server must also be activated in the properties of the PLC.**			
High speed counters (HSC)\HSC1\General\Enable					
Enable this high speed counter	0	**Enable this high speed counter**	0	**Enable this high speed counter**	0
Enable this high speed counter	0	**Enable this high speed counter**	0	**Enable this high speed counter**	0
High speed counters (HSC)\HSC1\General\Project information					
Name	HSC_1	**Comment**		**Name**	HSC_2
Comment		**Name**	HSC_3	**Comment**	
Name	HSC_4	**Comment**		**Name**	HSC_5
Comment		**Name**	HSC_6	**Comment**	
High speed counters (HSC)\HSC1\I/O addresses\Input addresses					
Start address	1000.0	**End address**	1003.7	**Start address**	1004.0
End address	1007.7	**Organization block**	0	**Start address**	1008.0
End address	1011.7	**Organization block**	0	**Process image**	0
Start address	1012.0	**End address**	1015.7	**Organization block**	0
Process image	0	**Start address**	1016.0	**End address**	1019.7
Organization block	0	**Process image**	0	**Start address**	1020.0
End address	1023.7	**Organization block**	0	**Process image**	0
Organization block	0	**Process image**	0	**Process image**	0
Pulse generators (PTO/PWM)\PTO1/PWM1\General\Enable					
Enable this pulse generator	0	**Enable this pulse generator**	0		
Pulse generators (PTO/PWM)\PTO1/PWM1\General\Project information					
Name	Pulse_1	**Comment**		**Name**	Pulse_2
Comment					
Pulse generators (PTO/PWM)\PTO1/PWM1\I/O addresses\Output addresses					
Start address	1000.0	**End address**	1001.7	**Start address**	1002.0
End address	1003.7	**Organization block**	0	**Organization block**	0

Process image	0	**Process image**	0		
Startup					
Startup after POWER ON	Warm restart - mode before POWER OFF	**Comparison preset to actual configuration**	Startup CPU even if mismatch	**Configuration time**	60000ms
OBs should be interruptible	1				
Cycle					
Cycle monitoring time [ms]	150ms			**Enable minimum cycle time for cyclic OBs**	1
Minimum cycle time	30ms				
Communication load					
Cycle load due to communication [%]	20%				
System and clock memory\System memory bits					
Enable the use of system memory byte	0	**Address of system memory byte (MBx)**	1	**First cycle**	
Diagnostic status changed		**Always 1 (high)**		**Always 0 (low)**	
System and clock memory\Clock memory bits					
Enable the use of clock memory byte	0	**Address of clock memory byte (MBx)**	0	**10 Hz clock**	
5 Hz clock		**2.5 Hz clock**		**2 Hz clock**	
1.25 Hz clock		**1 Hz clock**		**0.625 Hz clock**	
0.5 Hz clock					
Web server\General					
Activate Web server on all modules of this device	False	**Permit access only with HTTPS**	True		
Web server\Automatic update					
Enable automatic update	True	**Update interval**	0s		
Web server\User-defined web pages					
Application name	**HTML source path**	**Default HTML page**	**Files with dynamic content**	**Web DB number**	**Fragment DB number**
		index.htm	.htm;.html	333	334
Web server\Overview of interfaces					
Device		**Interface**		**Enabled web server access**	
PLC_1		PROFINET-Schnittstelle_1		False	
User interface languages					
Assign project language			**User interface languages**		
German (Germany)			German		
German (Germany)			English		
German (Germany)			French		
German (Germany)			Spanish		
German (Germany)			Italian		
German (Germany)			Chinese (simplified)		
Time of day\Local time					
Time zone	(UTC +01:00) Berlin, Bern, Brussels, Rome, Stockholm, Vienna				
Time of day\Daylight saving time					
Activate daylight saving time	1	**Difference between standard and daylight saving time**	60min		
Time of day\Daylight saving time\Start of daylight saving time					
First week of the month:	Last		Sunday	**in**	March
at	1:00 a.m.				
Time of day\Daylight saving time\Start of standard time					
	Last		Sunday	**in**	October
at	2:00 a.m.				
Protection & Security					
Level of protection	No protection				
Protection & Security\Connection mechanisms\Permit access with PUT/GET communication from remote partner					
Permit access with PUT/GET communication from remote partner	True				
Protection & Security\Syslog					
Enable transfer of syslog messages to a syslog server	False				
Protection & Security\Security event					
Summarize diagnostics in case of high message volume	True	**Length of an interval**	20	**Unit**	seconds
Protection & Security\External load memory					
Disable copying from internal load memory to external load memory	False				
Advanced configuration\DnsParameterConfigurationMenu					
The TreeNode DnsConfigurationMenu was not filled by some ACF					
Advanced configuration\Configuration control\Configuration control for central configuration					
Allow to reconfigure the device via the user program	0				

Advanced configuration\SNMP\SNMP configuration (Simple Network Management Protocol).					
Activate SNMP	True	**Read-only community string:**	public	**Read-write community string:**	private

Configuration control\Configuration control for central configuration	
Allow to reconfigure the device via the user program	0

Connection resources

	Station resources - Reserved - Maximum	Station resources - Reserved - Configured	Station resources - Dynamic - Configured	Module resources - PLC_1 [CPU 1217C DC/DC/DC] - Configured
Maximum number of resources:		34	34	68
	Maximum	Configured	Configured	Configured
PG communication:	4	-	-	-
HMI communication:	12	0	0	0
S7 communication:	8	0	0	0
Open user communication:	8	1	0	1
Web communication:	2	-	-	-
OPC UA client/server communication:	0	-	-	-
Other communication:	-	-	0	0
Total resources used:		1	0	1
Available resources:		33	34	67

Overview of addresses\Overview of addresses\Overview of addresses					
Inputs	True	**Outputs**	True	**Address gaps**	False
Slot	True				

Type	Addr. from	Addr. to	Module	PIP	Device name	Device number	Size	Master / IO system	Rack	Slot
I	0	1	DI 14/DQ 10_1	None	PLC_1 [CPU 1217C DC/DC/DC]	-	2 Bytes	-	0	1 1
O	0	1	DI 14/DQ 10_1	Automatic update	PLC_1 [CPU 1217C DC/DC/DC]	-	2 Bytes	-	0	1 1
I	64	67	AI 2/AQ 2_1	Automatic update	PLC_1 [CPU 1217C DC/DC/DC]	-	4 Bytes	-	0	1 2
O	64	67	AI 2/AQ 2_1	Automatic update	PLC_1 [CPU 1217C DC/DC/DC]	-	4 Bytes	-	0	1 2
I	1000	1003	HSC_1	Automatic update	PLC_1 [CPU 1217C DC/DC/DC]	-	4 Bytes	-	0	1 16
I	1004	1007	HSC_2	Automatic update	PLC_1 [CPU 1217C DC/DC/DC]	-	4 Bytes	-	0	1 17
I	1008	1011	HSC_3	Automatic update	PLC_1 [CPU 1217C DC/DC/DC]	-	4 Bytes	-	0	1 18
I	1012	1015	HSC_4	Automatic update	PLC_1 [CPU 1217C DC/DC/DC]	-	4 Bytes	-	0	1 19
I	1016	1019	HSC_5	Automatic update	PLC_1 [CPU 1217C DC/DC/DC]	-	4 Bytes	-	0	1 20
I	1020	1023	HSC_6	Automatic update	PLC_1 [CPU 1217C DC/DC/DC]	-	4 Bytes	-	0	1 21
O	1000	1001	Pulse_1	Automatic update	PLC_1 [CPU 1217C DC/DC/DC]	-	2 Bytes	-	0	1 32
O	1002	1003	Pulse_2	Automatic update	PLC_1 [CPU 1217C DC/DC/DC]	-	2 Bytes	-	0	1 33
O	1004	1005	Pulse_3	Automatic update	PLC_1 [CPU 1217C DC/DC/DC]	-	2 Bytes	-	0	1 34
O	1006	1007	Pulse_4	Automatic update	PLC_1 [CPU 1217C DC/DC/DC]	-	2 Bytes	-	0	1 35
I	2	2	DI 8x24VDC_1	Automatic update	PLC_1 [CPU 1217C DC/DC/DC]	-	1 Bytes	-	0	2
O	2	3	DQ 16x24VDC_2	Automatic update	PLC_1 [CPU 1217C DC/DC/DC]	-	2 Bytes	-	0	3
O	4	5	DQ 16x24VDC_1	Automatic update	PLC_1 [CPU 1217C DC/DC/DC]	-	2 Bytes	-	0	4
I	32	47	AI 8x13BIT_1	Automatic update	PLC_1 [CPU 1217C DC/DC/DC]	-	16 Bytes	-	0	5
I	48	63	AI 8x13BIT_2	Automatic update	PLC_1 [CPU 1217C DC/DC/DC]	-	16 Bytes	-	0	6
O	36	43	AQ 4x14BIT_1	Automatic update	PLC_1 [CPU 1217C DC/DC/DC]	-	8 Bytes	-	0	7
O	44	51	AQ 4x14BIT_2	Automatic update	PLC_1 [CPU 1217C DC/DC/DC]	-	8 Bytes	-	0	8
O	52	59	AQ 4x14BIT_3	Automatic update	PLC_1 [CPU 1217C DC/DC/DC]	-	8 Bytes	-	0	9

PLC_1 [CPU 1217C DC/DC/DC] / Local modules

DI 8x24VDC_1

DI 8x24VDC_1					
General\Project information					
Name	DI 8x24VDC_1	**Author**	helpf	**Comment**	
Slot	2				
General\Catalog information					
Short designation	SM 1221 DI8 x 24VDC	**Description**	Digital input module DI8 x 24VDC SINK/SOURCE; configurable input delay; plug-in terminal blocks	**Article number**	6ES7 221-1BF32-0XB0
Firmware version	V2.0		False		
DI 8\Project information					
Name	DI 8x24VDC_1	**Comment**			
DI 8\Digital inputs\Input filters					
I2.0 - I2.3	6.40ms	**I2.4 - I2.7**	6.40ms		
DI 8\Digital inputs\Channel0					
Channel address	I2.0				
DI 8\Digital inputs\Channel1					
Channel address	I2.1				
DI 8\Digital inputs\Channel2					
Channel address	I2.2				
DI 8\Digital inputs\Channel3					
Channel address	I2.3				
DI 8\Digital inputs\Channel4					
Channel address	I2.4				
DI 8\Digital inputs\Channel5					
Channel address	I2.5				
DI 8\Digital inputs\Channel6					
Channel address	I2.6				
DI 8\Digital inputs\Channel7					
Channel address	I2.7				
DI 8\I/O addresses\Input addresses					
Start address	2.0	**End address**	2.7	**Organization block**	0
Process image	0				

PLC_1 [CPU 1217C DC/DC/DC] / Local modules

DQ 16x24VDC_2

DQ 16x24VDC_2					
General\Project information					
Name	DQ 16x24VDC_2	**Author**	helpf	**Comment**	
Slot	3				
General\Catalog information					
Short designation	SM 1222 DQ16 x 24VDC	**Description**	Digital output module DQ16 x 24VDC; plug-in terminal blocks	**Article number**	6ES7 222-1BH32-0XB0
Firmware version	V2.0		False		
DQ 16\Project information					
Name	DQ 16x24VDC_2	**Comment**			
DQ 16\Digital outputs					
Reaction to CPU STOP	Use substitute value				
DQ 16\Digital outputs\Channel0					
Channel address	Q2.0	**Substitute a value of 1 on a change from RUN to STOP.**	0		
DQ 16\Digital outputs\Channel1					
Channel address	Q2.1	**Substitute a value of 1 on a change from RUN to STOP.**	0		
DQ 16\Digital outputs\Channel2					
Channel address	Q2.2	**Substitute a value of 1 on a change from RUN to STOP.**	0		
DQ 16\Digital outputs\Channel3					
Channel address	Q2.3	**Substitute a value of 1 on a change from RUN to STOP.**	0		
DQ 16\Digital outputs\Channel4					
Channel address	Q2.4	**Substitute a value of 1 on a change from RUN to STOP.**	0		
DQ 16\Digital outputs\Channel5					
Channel address	Q2.5	**Substitute a value of 1 on a change from RUN to STOP.**	0		
DQ 16\Digital outputs\Channel6					
Channel address	Q2.6	**Substitute a value of 1 on a change from RUN to STOP.**	0		
DQ 16\Digital outputs\Channel7					
Channel address	Q2.7	**Substitute a value of 1 on a change from RUN to STOP.**	0		
DQ 16\Digital outputs\Channel8					
Channel address	Q3.0	**Substitute a value of 1 on a change from RUN to STOP.**	0		
DQ 16\Digital outputs\Channel9					
Channel address	Q3.1	**Substitute a value of 1 on a change from RUN to STOP.**	0		
DQ 16\Digital outputs\Channel10					
Channel address	Q3.2	**Substitute a value of 1 on a change from RUN to STOP.**	0		
DQ 16\Digital outputs\Channel11					
Channel address	Q3.3	**Substitute a value of 1 on a change from RUN to STOP.**	0		
DQ 16\Digital outputs\Channel12					
Channel address	Q3.4	**Substitute a value of 1 on a change from RUN to STOP.**	0		
DQ 16\Digital outputs\Channel13					
Channel address	Q3.5	**Substitute a value of 1 on a change from RUN to STOP.**	0		
DQ 16\Digital outputs\Channel14					
Channel address	Q3.6	**Substitute a value of 1 on a change from RUN to STOP.**	0		
DQ 16\Digital outputs\Channel15					
Channel address	Q3.7	**Substitute a value of 1 on a change from RUN to STOP.**	0		
DQ 16\I/O addresses\Output addresses					
Start address	2.0	**End address**	3.7	**Organization block**	0
Process image	0				

PLC_1 [CPU 1217C DC/DC/DC] / Local modules

DQ 16x24VDC_1

DQ 16x24VDC_1					
General\Project information					
Name	DQ 16x24VDC_1	**Author**	helpf	**Comment**	
Slot	4				
General\Catalog information					
Short designation	SM 1222 DQ16 x 24VDC	**Description**	Digital output module DQ16 x 24VDC; plug-in terminal blocks	**Article number**	6ES7 222-1BH32-0XB0
Firmware version	V2.0		False		
DQ 16\Project information					
Name	DQ 16x24VDC_1	**Comment**			
DQ 16\Digital outputs					
Reaction to CPU STOP	Use substitute value				
DQ 16\Digital outputs\Channel0					
Channel address	Q4.0	**Substitute a value of 1 on a change from RUN to STOP.**	0		
DQ 16\Digital outputs\Channel1					
Channel address	Q4.1	**Substitute a value of 1 on a change from RUN to STOP.**	0		
DQ 16\Digital outputs\Channel2					
Channel address	Q4.2	**Substitute a value of 1 on a change from RUN to STOP.**	0		
DQ 16\Digital outputs\Channel3					
Channel address	Q4.3	**Substitute a value of 1 on a change from RUN to STOP.**	0		
DQ 16\Digital outputs\Channel4					
Channel address	Q4.4	**Substitute a value of 1 on a change from RUN to STOP.**	0		
DQ 16\Digital outputs\Channel5					
Channel address	Q4.5	**Substitute a value of 1 on a change from RUN to STOP.**	0		
DQ 16\Digital outputs\Channel6					
Channel address	Q4.6	**Substitute a value of 1 on a change from RUN to STOP.**	0		
DQ 16\Digital outputs\Channel7					
Channel address	Q4.7	**Substitute a value of 1 on a change from RUN to STOP.**	0		
DQ 16\Digital outputs\Channel8					
Channel address	Q5.0	**Substitute a value of 1 on a change from RUN to STOP.**	0		
DQ 16\Digital outputs\Channel9					
Channel address	Q5.1	**Substitute a value of 1 on a change from RUN to STOP.**	0		
DQ 16\Digital outputs\Channel10					
Channel address	Q5.2	**Substitute a value of 1 on a change from RUN to STOP.**	0		
DQ 16\Digital outputs\Channel11					
Channel address	Q5.3	**Substitute a value of 1 on a change from RUN to STOP.**	0		
DQ 16\Digital outputs\Channel12					
Channel address	Q5.4	**Substitute a value of 1 on a change from RUN to STOP.**	0		
DQ 16\Digital outputs\Channel13					
Channel address	Q5.5	**Substitute a value of 1 on a change from RUN to STOP.**	0		
DQ 16\Digital outputs\Channel14					
Channel address	Q5.6	**Substitute a value of 1 on a change from RUN to STOP.**	0		
DQ 16\Digital outputs\Channel15					
Channel address	Q5.7	**Substitute a value of 1 on a change from RUN to STOP.**	0		
DQ 16\I/O addresses\Output addresses					
Start address	4.0	**End address**	5.7	**Organization block**	0
Process image	0				

PLC_1 [CPU 1217C DC/DC/DC] / Local modules

AI 8x13BIT_1

AI 8x13BIT_1					
General\Project information					
Name	AI 8x13BIT_1	**Author**	helpf	**Comment**	
Slot	5				
General\Catalog information					
Short designation	SM 1231 AI8	**Description**	Analog input module with AI8 x 13 bits; plug-in terminal blocks; input: 2.5V, 5V 10V and 0 to 20mA; configurable frequency suppression; configurable smoothing; configurable diagnostics	**Article number**	6ES7 231-4HF30-0XB0
Firmware version	V1.0		False		
AI 8\Project information					
Name	AI 8x13BIT_1	**Comment**			
AI 8\Module diagnostics					
Enable power supply diagnostics	1	**Additional diagnostics may be selected for each input/output.**			
AI 8\Analog inputs\Noise reduction					
Integration time	50 Hz (20 ms)				
AI 8\Analog inputs\Channel0					
Channel address	IW32	**Measurement type**	Voltage	**Voltage range**	+/- 10 V
Smoothing	Weak (4 cycles)			**Enable overflow diagnostics**	1
Enable underflow diagnostics	1				
AI 8\Analog inputs\Channel1					
Channel address	IW34	**Measurement type**	Voltage	**Voltage range**	+/- 10 V
Smoothing	Weak (4 cycles)			**Enable overflow diagnostics**	1
Enable underflow diagnostics	1				
AI 8\Analog inputs\Channel2					
Channel address	IW36	**Measurement type**	Voltage	**Voltage range**	+/- 10 V
Smoothing	Weak (4 cycles)			**Enable overflow diagnostics**	1
Enable underflow diagnostics	1				
AI 8\Analog inputs\Channel3					
Channel address	IW38	**Measurement type**	Voltage	**Voltage range**	+/- 10 V
Smoothing	Weak (4 cycles)			**Enable overflow diagnostics**	1
Enable underflow diagnostics	1				
AI 8\Analog inputs\Channel4					
Channel address	IW40	**Measurement type**	Voltage	**Voltage range**	+/- 10 V
Smoothing	Weak (4 cycles)			**Enable overflow diagnostics**	1
Enable underflow diagnostics	1				
AI 8\Analog inputs\Channel5					
Channel address	IW42	**Measurement type**	Voltage	**Voltage range**	+/- 10 V
Smoothing	Weak (4 cycles)			**Enable overflow diagnostics**	1
Enable underflow diagnostics	1				
AI 8\Analog inputs\Channel6					
Channel address	IW44	**Measurement type**	Voltage	**Voltage range**	+/- 10 V
Smoothing	Weak (4 cycles)			**Enable overflow diagnostics**	1
Enable underflow diagnostics	1				
AI 8\Analog inputs\Channel7					
Channel address	IW46	**Measurement type**	Voltage	**Voltage range**	+/- 10 V
Smoothing	Weak (4 cycles)			**Enable overflow diagnostics**	1
Enable underflow diagnostics	1				
AI 8\I/O addresses\Input addresses					
Start address	32	**End address**	47	**Organization block**	0
Process image	0				

PLC_1 [CPU 1217C DC/DC/DC] / Local modules

AI 8x13BIT_2

AI 8x13BIT_2					
General\Project information					
Name	AI 8x13BIT_2	**Author**	helpf	**Comment**	
Slot	6				
General\Catalog information					
Short designation	SM 1231 AI8	**Description**	Analog input module with AI8 x 13 bits; plug-in terminal blocks; input: 2.5V, 5V 10V and 0 to 20mA; configurable frequency suppression; configurable smoothing; configurable diagnostics	**Article number**	6ES7 231-4HF30-0XB0
Firmware version	V1.0		False		
AI 8\Project information					
Name	AI 8x13BIT_2	**Comment**			
AI 8\Module diagnostics					
Enable power supply diagnostics	1	**Additional diagnostics may be selected for each input/output.**			
AI 8\Analog inputs\Noise reduction					
Integration time	50 Hz (20 ms)				
AI 8\Analog inputs\Channel0					
Channel address	IW48	**Measurement type**	Voltage	**Voltage range**	+/- 10 V
Smoothing	Weak (4 cycles)			**Enable overflow diagnostics**	1
Enable underflow diagnostics	1				
AI 8\Analog inputs\Channel1					
Channel address	IW50	**Measurement type**	Voltage	**Voltage range**	+/- 10 V
Smoothing	Weak (4 cycles)			**Enable overflow diagnostics**	1
Enable underflow diagnostics	1				
AI 8\Analog inputs\Channel2					
Channel address	IW52	**Measurement type**	Voltage	**Voltage range**	+/- 10 V
Smoothing	Weak (4 cycles)			**Enable overflow diagnostics**	1
Enable underflow diagnostics	1				
AI 8\Analog inputs\Channel3					
Channel address	IW54	**Measurement type**	Voltage	**Voltage range**	+/- 10 V
Smoothing	Weak (4 cycles)			**Enable overflow diagnostics**	1
Enable underflow diagnostics	1				
AI 8\Analog inputs\Channel4					
Channel address	IW56	**Measurement type**	Voltage	**Voltage range**	+/- 10 V
Smoothing	Weak (4 cycles)			**Enable overflow diagnostics**	1
Enable underflow diagnostics	1				
AI 8\Analog inputs\Channel5					
Channel address	IW58	**Measurement type**	Voltage	**Voltage range**	+/- 10 V
Smoothing	Weak (4 cycles)			**Enable overflow diagnostics**	1
Enable underflow diagnostics	1				
AI 8\Analog inputs\Channel6					
Channel address	IW60	**Measurement type**	Voltage	**Voltage range**	+/- 10 V
Smoothing	Weak (4 cycles)			**Enable overflow diagnostics**	1
Enable underflow diagnostics	1				
AI 8\Analog inputs\Channel7					
Channel address	IW62	**Measurement type**	Voltage	**Voltage range**	+/- 10 V
Smoothing	Weak (4 cycles)			**Enable overflow diagnostics**	1
Enable underflow diagnostics	1				
AI 8\I/O addresses\Input addresses					
Start address	48	**End address**	63	**Organization block**	0
Process image	0				

PLC_1 [CPU 1217C DC/DC/DC] / Local modules

AQ 4x14BIT_1

AQ 4x14BIT_1					
General\Project information					
Name	AQ 4x14BIT_1	**Author**	helpf	**Comment**	
Slot	7				
General\Catalog information					
Short designation	SM 1232 AQ4	**Description**	Analog output module AQ4 x 14 bits; plug-in terminal blocks; output: +/-10V and 0 to 20 mA; configurable diagnostics; configurable substitute value for output	**Article number**	6ES7 232-4HD32-0XB0
Firmware version	V2.1		False		
AQ 4\Project information					
Name	AQ 4x14BIT_1	**Comment**			
AQ 4\Module diagnostics					
Enable power supply diagnostics	1	**Additional diagnostics may be selected for each input/output.**			
AQ 4\Analog outputs					
Reaction to CPU STOP	Use substitute value				
AQ 4\Analog outputs\Channel0					
Channel address	QW36	**Analog output type**	Voltage	**Voltage range**	+/- 10 V
Substitute value for channel on a change from RUN to STOP	0.000V			**Enable short circuit diagnostics**	1
Enable overflow diagnostics	1	**Enable underflow diagnostics**	1		
AQ 4\Analog outputs\Channel1					
Channel address	QW38	**Analog output type**	Voltage	**Voltage range**	+/- 10 V
Substitute value for channel on a change from RUN to STOP	0.000V			**Enable short circuit diagnostics**	1
Enable overflow diagnostics	1	**Enable underflow diagnostics**	1		
AQ 4\Analog outputs\Channel2					
Channel address	QW40	**Analog output type**	Voltage	**Voltage range**	+/- 10 V
Substitute value for channel on a change from RUN to STOP	0.000V			**Enable short circuit diagnostics**	1
Enable overflow diagnostics	1	**Enable underflow diagnostics**	1		
AQ 4\Analog outputs\Channel3					
Channel address	QW42	**Analog output type**	Voltage	**Voltage range**	+/- 10 V
Substitute value for channel on a change from RUN to STOP	0.000V			**Enable short circuit diagnostics**	1
Enable overflow diagnostics	1	**Enable underflow diagnostics**	1		
AQ 4\I/O addresses\Output addresses					
Start address	36	**End address**	43	**Organization block**	0
Process image	0				

PLC_1 [CPU 1217C DC/DC/DC] / Local modules

AQ 4x14BIT_2

AQ 4x14BIT_2					
General\Project information					
Name	AQ 4x14BIT_2	**Author**	helpf	**Comment**	
Slot	8				
General\Catalog information					
Short designation	SM 1232 AQ4	**Description**	Analog output module AQ4 x 14 bits; plug-in terminal blocks; output: +/-10V and 0 to 20 mA; configurable diagnostics; configurable substitute value for output	**Article number**	6ES7 232-4HD32-0XB0
Firmware version	V2.1		False		
AQ 4\Project information					
Name	AQ 4x14BIT_2	**Comment**			
AQ 4\Module diagnostics					
Enable power supply diagnostics	1	**Additional diagnostics may be selected for each input/output.**			
AQ 4\Analog outputs					
Reaction to CPU STOP	Use substitute value				
AQ 4\Analog outputs\Channel0					
Channel address	QW44	**Analog output type**	Voltage	**Voltage range**	+/- 10 V
Substitute value for channel on a change from RUN to STOP	0.000V			**Enable short circuit diagnostics**	1
Enable overflow diagnostics	1	**Enable underflow diagnostics**	1		
AQ 4\Analog outputs\Channel1					
Channel address	QW46	**Analog output type**	Voltage	**Voltage range**	+/- 10 V
Substitute value for channel on a change from RUN to STOP	0.000V			**Enable short circuit diagnostics**	1
Enable overflow diagnostics	1	**Enable underflow diagnostics**	1		
AQ 4\Analog outputs\Channel2					
Channel address	QW48	**Analog output type**	Voltage	**Voltage range**	+/- 10 V
Substitute value for channel on a change from RUN to STOP	0.000V			**Enable short circuit diagnostics**	1
Enable overflow diagnostics	1	**Enable underflow diagnostics**	1		
AQ 4\Analog outputs\Channel3					
Channel address	QW50	**Analog output type**	Voltage	**Voltage range**	+/- 10 V
Substitute value for channel on a change from RUN to STOP	0.000V			**Enable short circuit diagnostics**	1
Enable overflow diagnostics	1	**Enable underflow diagnostics**	1		
AQ 4\I/O addresses\Output addresses					
Start address	44	**End address**	51	**Organization block**	0
Process image	0				

PLC_1 [CPU 1217C DC/DC/DC] / Local modules

AQ 4x14BIT_3

AQ 4x14BIT_3					
General\Project information					
Name	AQ 4x14BIT_3	**Author**	helpf	**Comment**	
Slot	9				
General\Catalog information					
Short designation	SM 1232 AQ4	**Description**	Analog output module AQ4 x 14 bits; plug-in terminal blocks; output: +/-10V and 0 to 20 mA; configurable diagnostics; configurable substitute value for output	**Article number**	6ES7 232-4HD32-0XB0
Firmware version	V2.1		False		
AQ 4\Project information					
Name	AQ 4x14BIT_3	**Comment**			
AQ 4\Module diagnostics					
Enable power supply diagnostics	1	**Additional diagnostics may be selected for each input/output.**			
AQ 4\Analog outputs					
Reaction to CPU STOP	Use substitute value				
AQ 4\Analog outputs\Channel0					
Channel address	QW52	**Analog output type**	Voltage	**Voltage range**	+/- 10 V
Substitute value for channel on a change from RUN to STOP	0.000V			**Enable short circuit diagnostics**	1
Enable overflow diagnostics	1	**Enable underflow diagnostics**	1		
AQ 4\Analog outputs\Channel1					
Channel address	QW54	**Analog output type**	Voltage	**Voltage range**	+/- 10 V
Substitute value for channel on a change from RUN to STOP	0.000V			**Enable short circuit diagnostics**	1
Enable overflow diagnostics	1	**Enable underflow diagnostics**	1		
AQ 4\Analog outputs\Channel2					
Channel address	QW56	**Analog output type**	Voltage	**Voltage range**	+/- 10 V
Substitute value for channel on a change from RUN to STOP	0.000V			**Enable short circuit diagnostics**	1
Enable overflow diagnostics	1	**Enable underflow diagnostics**	1		
AQ 4\Analog outputs\Channel3					
Channel address	QW58	**Analog output type**	Voltage	**Voltage range**	+/- 10 V
Substitute value for channel on a change from RUN to STOP	0.000V			**Enable short circuit diagnostics**	1
Enable overflow diagnostics	1	**Enable underflow diagnostics**	1		
AQ 4\I/O addresses\Output addresses					
Start address	52	**End address**	59	**Organization block**	0
Process image	0				